General technical parameters		Electrical technical parameters	
Stepping angle	1.2°	Rated voltage	24V DC
Number of phases	3	Rated current	5.8A
Insulation resistance	100MΩMIN(500V DC)	Resistance	0.32±15%Ω
Insulation level	Class B/winding	Inductance	0.8±20%mH
Weight	About 800g	Holding torque	0.9N.m
Braking torque	300gf.cm REF.	Moment of inertia	260g.cm²

Wiring Diagram

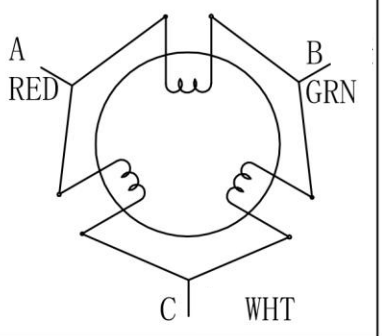

Overall dimension: unit=mm

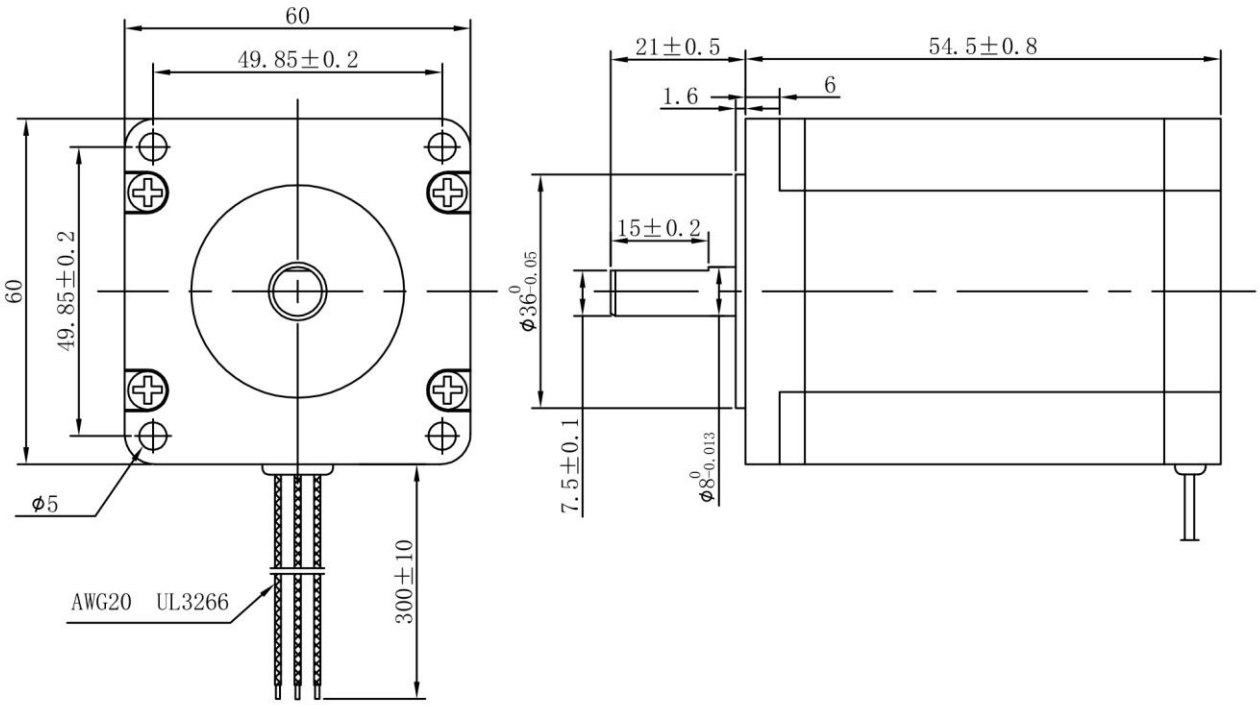

TOLERANCES (EXCEPT AS NOTES)	±0.3

MATERIAL	----						KST-60E34-0001
FINISH	----						
		SYM	DATE	REVISION NO.	REVISIONS	BY	NOTE

DRAWN	DESIGNED	CHECKED	CHECKED	SCALE	1:1	TITLE	MOTR SPECIFICATION	THIRD ANGLI PROJECTION
Dongguan Kaifull 19-01-15 Xu Yuanhao	Dongguan Kaifull 19-01-15 Xu Yuanhao					DWG.NO.	Y-19-0125-0	
				Guangdong Kaifull Electronics Technology Co., Ltd.			SHEET	1/1