General technical parameters		Electrical technical parameters	
Stepping angle	1.8°	Rated voltage	24V DC
Number of phases	2	Rated current	3.0A (half winding) 2.1A (full winding)
Insulation resistance	100MΩMIN(500V DC)	Resistance	1.2±15%Ω
Insulation level	Class B/winding	Inductance	2.2±20%mH
Weight	About 1100g	Holding torque	1.8N.m
Braking torque	1000gf.cm REF.	Moment of inertia	About 470g.cm²

Wiring Diagram

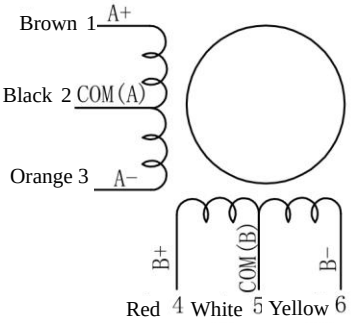

Overall dimension: unit=mm

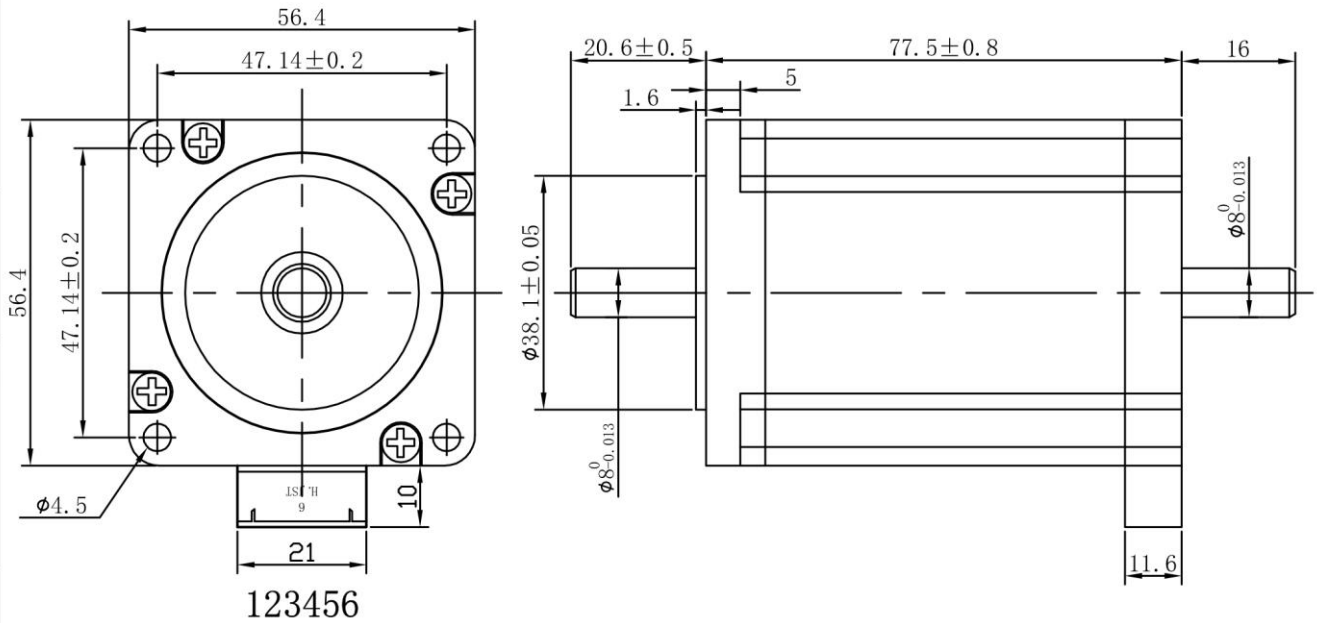

TOLERANCES (EXCEPT AS NOTES)	±0.3

MATERIAL	----							KST-57D53-D-0010
FINISH	----							
		SYM	DATE	REVISION NO.	REVISIONS	BY	NOTE	

DRAWN	DESIGNED	CHECKED	CHECKED	SCALE	1:1	TITLE	MOTR SPECIFICATION	THIRD ANGLI PROJECTION
Dongguan Kaifull 19-01-09 Xu Yuanhao	Dongguan Kaifull 19-01-09 Xu Yuanhao					DWG.NO.	Y-19-0109-0	
				Guangdong Kaifull Electronics Technology Co., Ltd.			SHEET	1/1