General technical parameters		Electrical technical parameters	
Stepping angle	1.8°	Rated voltage	24V DC
Number of phases	2	Rated current	1.3A
Insulation resistance	100MΩMIN(500V DC)	Resistance	3.0±15%Ω
Insulation level	Class B/winding	Inductance	5.5±20%mH
Weight	About 360g	Holding torque	530mN.m
Braking torque	28nN.m REF.	Moment of inertia	About 70g.cm²

Wiring Diagram

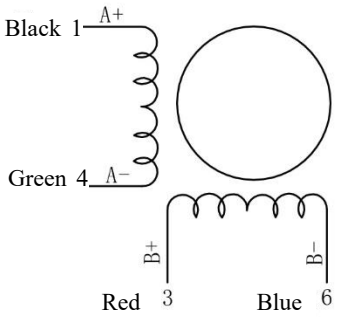

Overall dimension: unit=mm

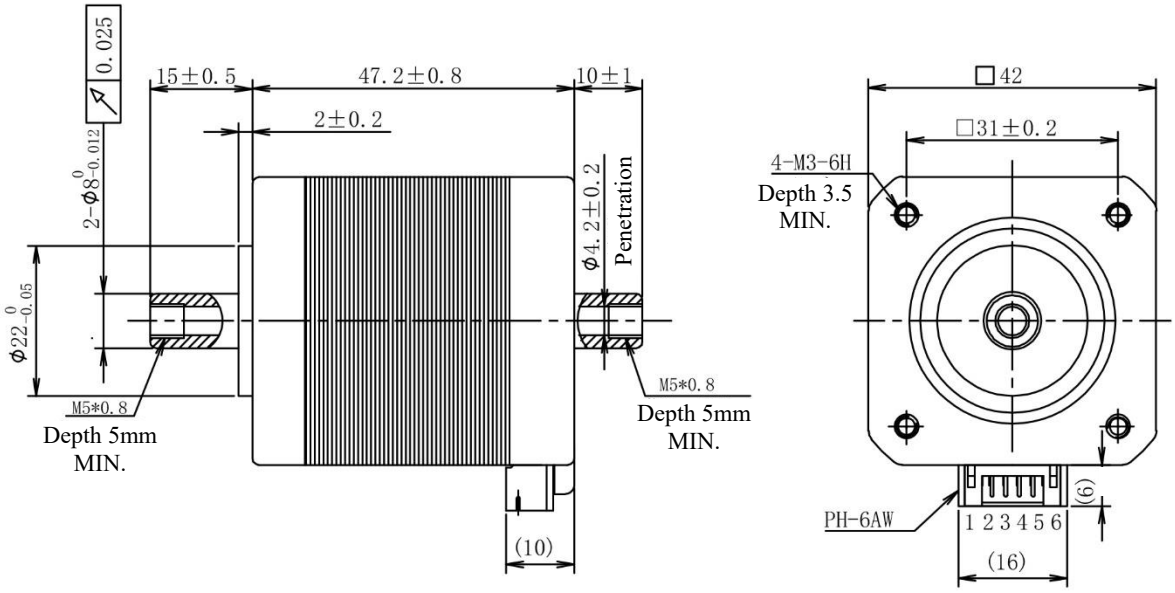

Lead terminal sequence	
No.	Corresponding wire color
1	Black
2	-
3	Red
4	Green
5	-
6	Blue

Terminal shell: PH-6Y

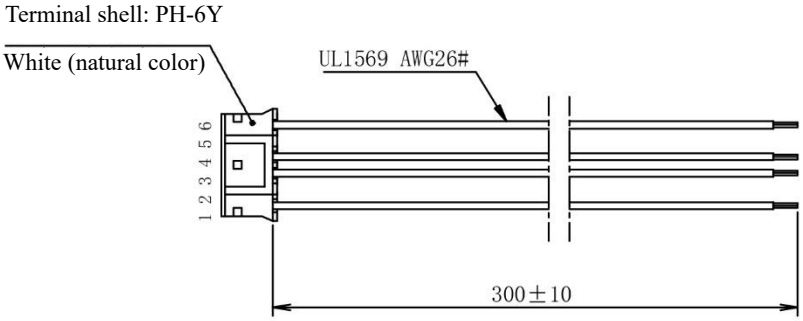

TOLERANCES (EXCEPT AS NOTES)	±0.3

MATERIAL	----						KST-42D30-ZK-0012
FINISH	----						
		SYM	DATE	REVISION NO.	REVISIONS	BY	NOTE

DRAWN	DESIGNED	CHECKED	CHECKED	SCALE	1:1	TITLE	MOTR SPECIFICATION	THIRD ANGLI PROJECTION
Dongguan Kaifull 19-01-21 Xu Yuanhao	Dongguan Kaifull 19-01-21 Xu Yuanhao					DWG.NO.	Y-19-0121-0	
				Guangdong Kaifull Electronics Technology Co., Ltd.			SHEET	1/1