General technical parameters		Electrical technical parameters	
Stepping angle	1.8°	Rated voltage	24V DC
Number of phases	2	Rated current	1.6A
Insulation resistance	100MΩMIN(500V DC)	Resistance	1.9±15%Ω
Insulation level	Class B/winding	Inductance	1.8±20%mH
Weight	About 290g	Holding torque	0.31N.m
Braking torque	300gf.cm REF.	Moment of inertia	About 56g.cm²

Wiring Diagram

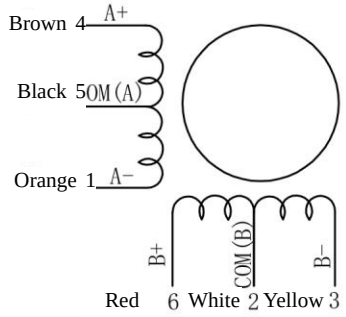

Overall dimension: unit=mm

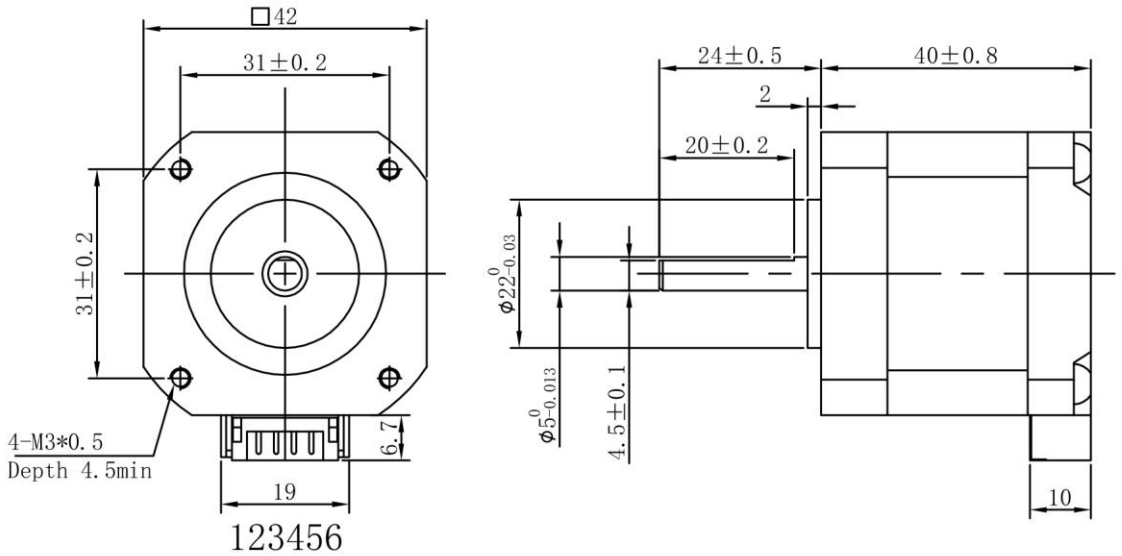

TOLERANCES (EXCEPT AS NOTES)	±0.3

MATERIAL	----						KST-42D22-0002
FINISH	----						
		SYM	DATE	REVISION NO.	REVISIONS	BY	NOTE

DRAWN	DESIGNED	CHECKED	CHECKED	SCALE	1:1	TITLE	MOTR SPECIFICATION	THIRD ANGLI PROJECTION
Dongguan Xinnong 18-08-27 Xu Yuanhao	Dongguan Xinnong 18-08-27 Xu Yuanhao					DWG.NO.	Y-18-0827-0	
				Guangdong Kaifull Electronics Technology Co., Ltd.			SHEET	1/1