General technical parameters		Electrical technical parameters	
Stepping angle	1.8°	Rated voltage	24V DC
Number of phases	2	Rated current	1.0A
Insulation resistance	100MΩMIN(500V DC)	Resistance	3.5±10%Ω
Insulation level	Class B/winding	Inductance	2.3±20%mH
Weight	About 200g	Holding torque	0.10N.m
Braking torque	50gf.cm REF.	Moment of inertia	About 18g.cm²

Wiring Diagram

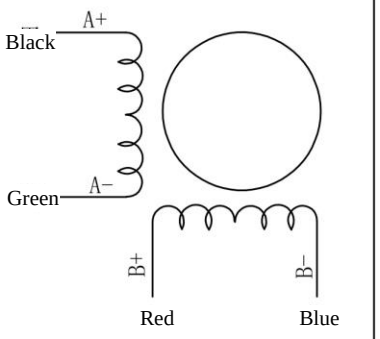

Overall dimension: unit=mm

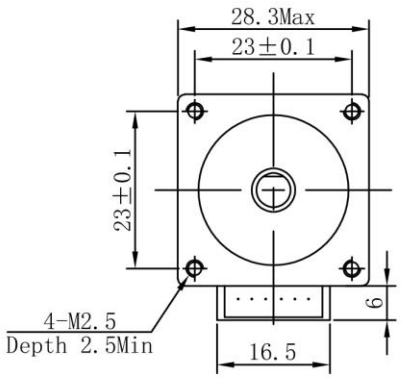

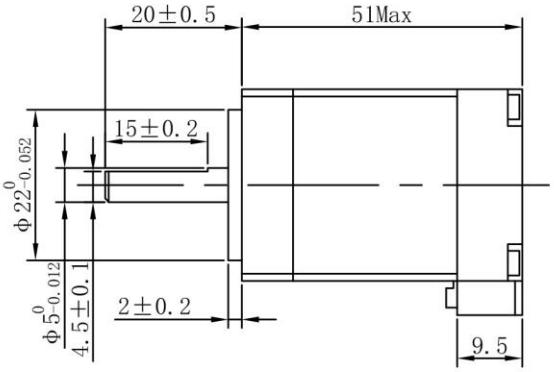

TOLERANCES (EXCEPT AS NOTES)	±0.3

MATERIAL	----						KST-28D37-0001
FINISH	----						
		SYM	DATE	REVISION NO.	REVISIONS	BY	NOTE

DRAWN	DESIGNED	CHECKED	CHECKED	SCALE	1:1	TITLE	MOTR SPECIFICATION
Dongguan Kaifull 21-09-06 Xu Yuanhao	Dongguan Kaifull 21-09-06 Xu Yuanhao					DWG.NO.	Y-21-0908-0
				Guangdong Kaifull Electronics Technology Co., Ltd.		SHEET	1/1