Version	A

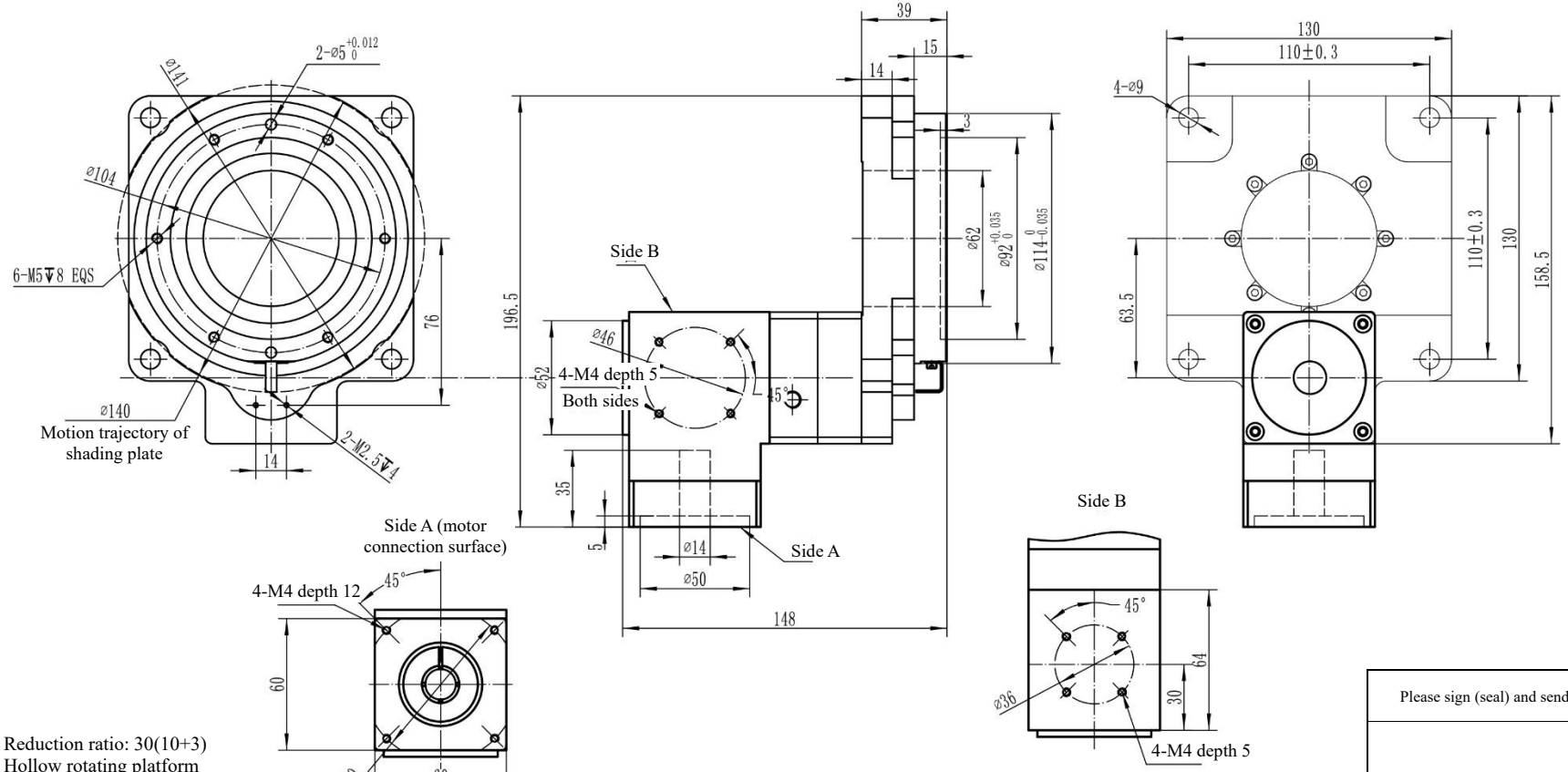

Reduction ratio: 30(10+3)
Hollow rotating platform reduction ratio: 10
Corner reduction ratio: 3
Permissible output torque: 20N.m
Permissible output speed: 200RPM
Permissible thrust load: 250kgf
Positioning accuracy: ≤ 8arc min
Platform end face runout: 0 01m

	Additional work	Hollow rotating platform			Guangdong Kaifull Electronics Technology Co., Ltd.
		Angle of view			YKW130R-30V2
		Stage mark	Weight	Scale	
				1:1.9	
Material name	Processing method				
Non-standard information bar		Page of			

Please sign (seal) and send back

*Continuous service life: 10000h