Version	A

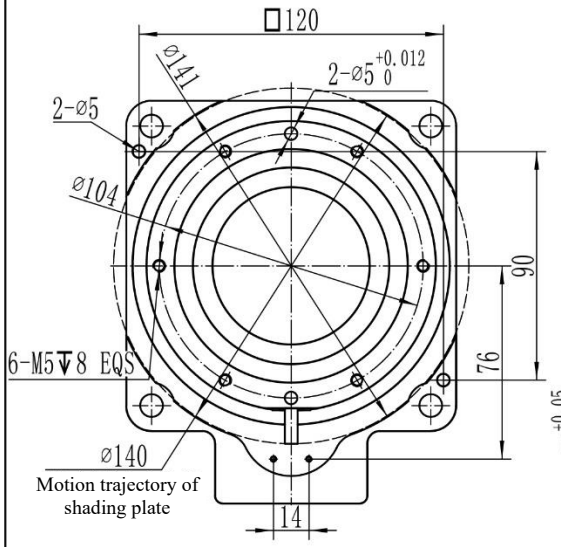

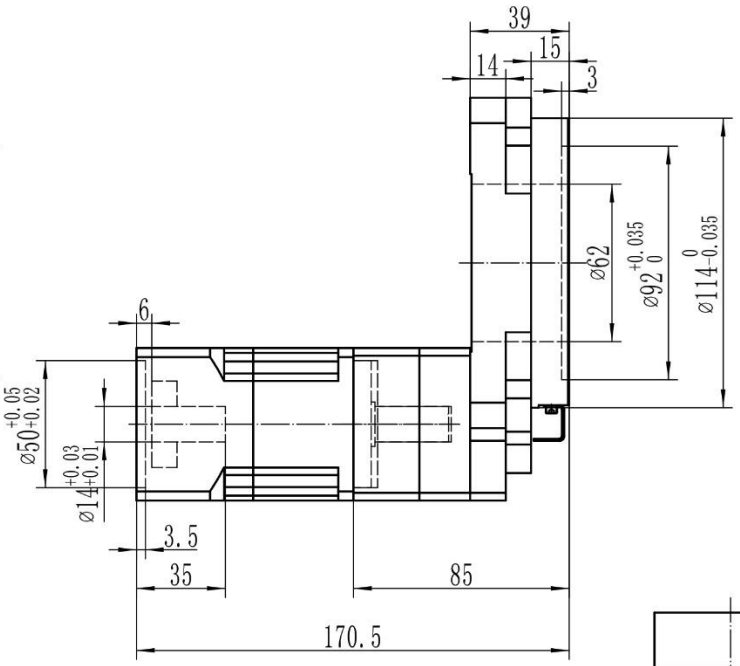

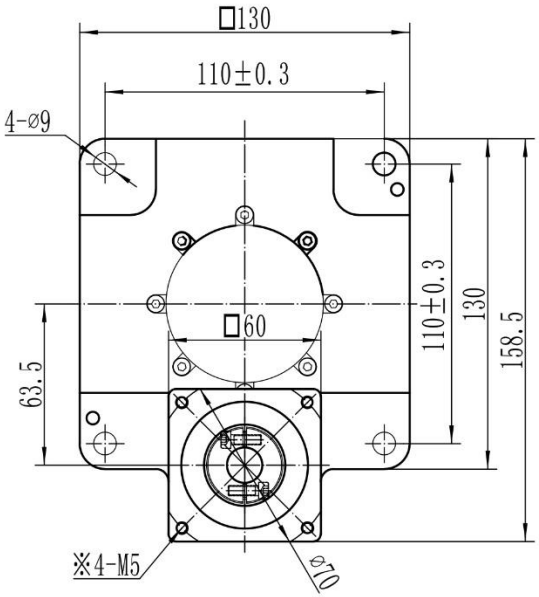

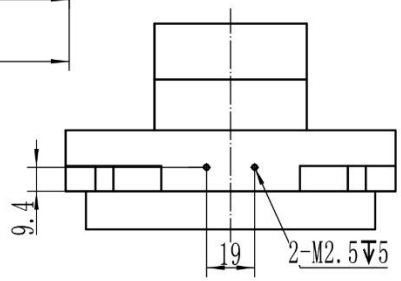

Ratio: 50(10+5)

Rated Output Torque: 32Nm

Emergency stop Torque: 32Nm×2

Rated Output Speed: 200RPM

Maximum Bending Moment: 50Nm

Allowable Axle Force: 2000N

Backlash: P1≤2arcmin

Reset positioning precision :±15arcmin

Noise:≤65dB

Service Life :20000h

Protection class :IP64

Operating temperature:-10~90℃

Standard lubrication: Grease

	Rework	Hollow rotating platform			Guangdong Kaifull Electronics Technology Co., Ltd.
	Rework				
	Rework	Angle of view			YKW130K-50V2
	Rework	Stage mark	Weight	Scale	
				1:1.8	10280226
Material name	Processing method				
Non-standard information bar		Page of			

Please sign (seal) and send back

*Continuous service life: 10000h