Version	A

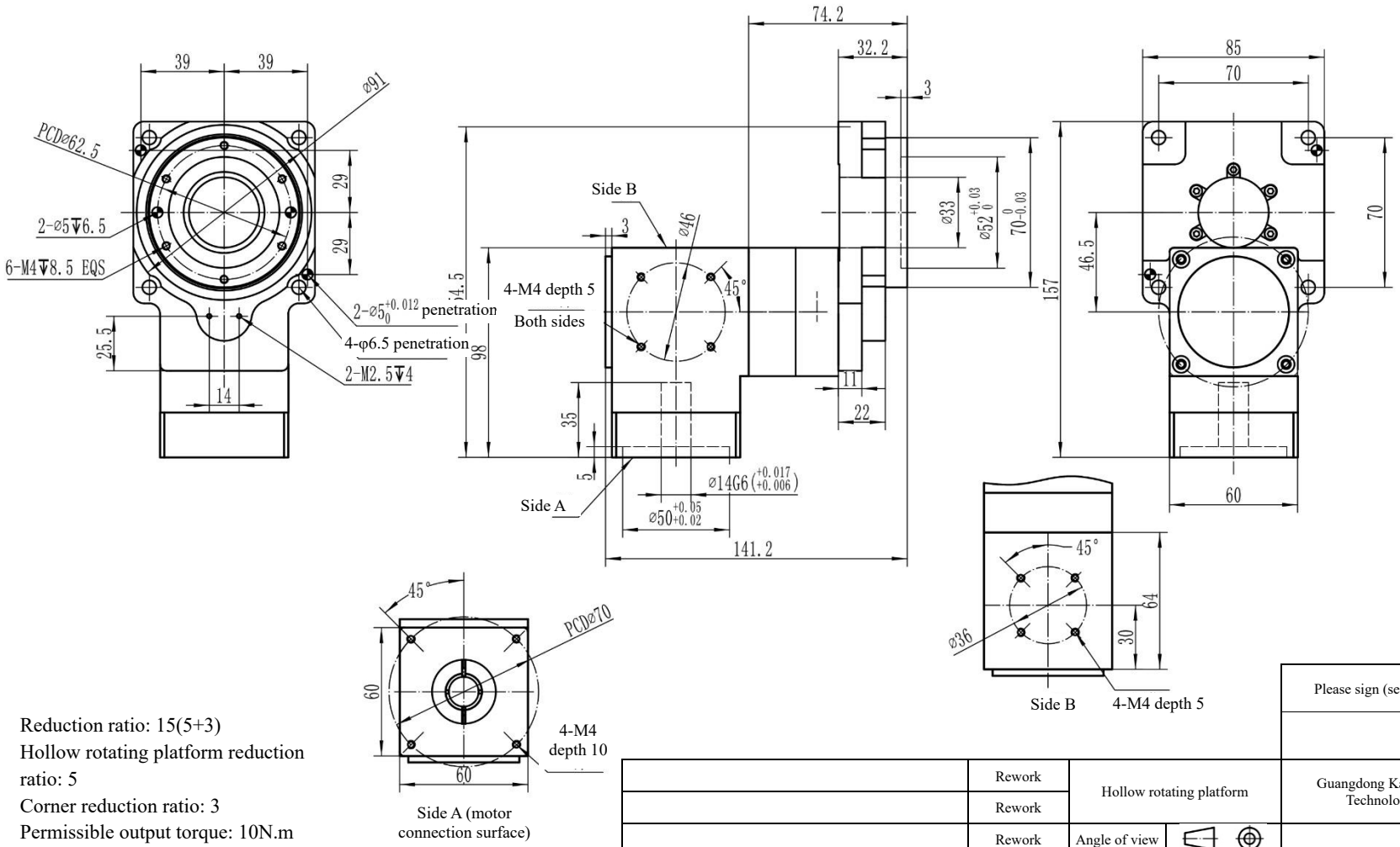

Reduction ratio: 15(5+3)
Hollow rotating platform reduction ratio: 5
Corner reduction ratio: 3
Permissible output torque: 10N.m
Permissible output speed: 200RPM
Permissible axial load: 500N
Repetitive positioning accuracy: ±15arc. sec
Platform end face runout: 0.01mm

*Continuous service life: 10000h

	Rework	Hollow rotating platform			Guangdong Kaifull Electronics Technology Co., Ltd.
	Rework				
	Rework	Angle of view			YKW85R-15T1
	Rework	Stage mark	Weight	Scale	
				1:1.8	
Material name	Processing method				
Non-standard information bar		Page of			

Please sign (seal) and send back