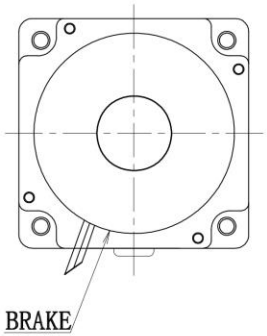

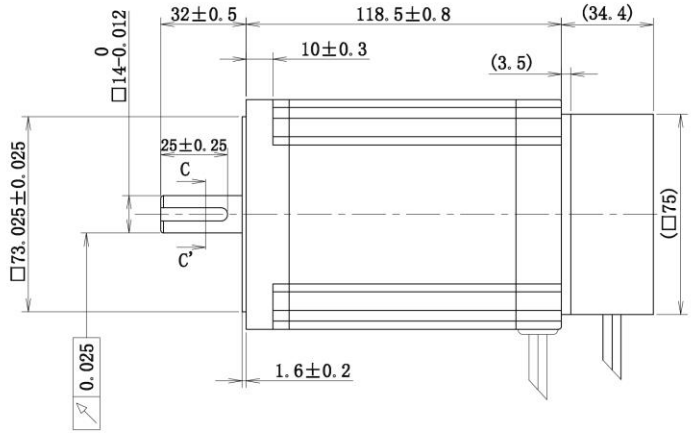

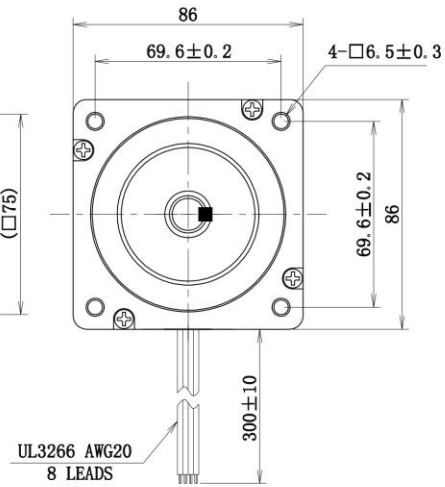

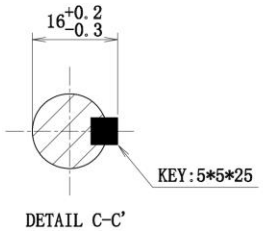

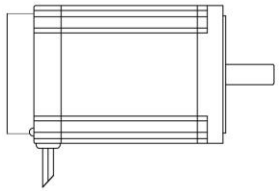

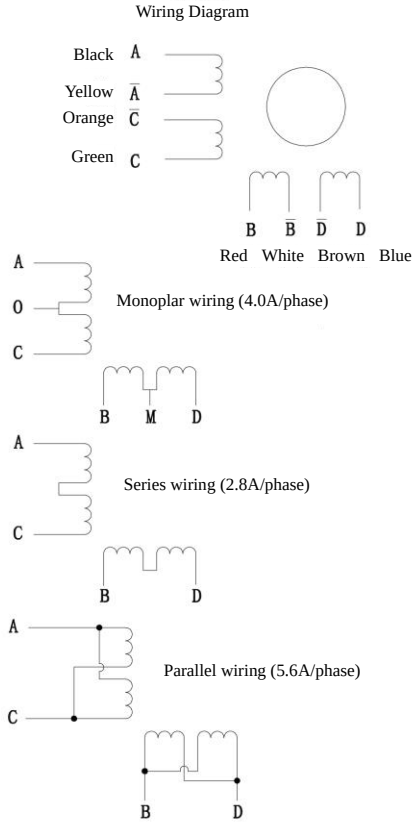

General parameters & standard parameters	
Step angle	1.8°
Number of phases	2
Insulation resistance	100MΩmin.
Insulation level	Class B
Moment of inertia	2500g.cm^2
Weight	4kg
Drive motor	36V
Rated current (parallel)	5.6A
Phase resistance	0.4Ω±10%
Phase inductance	4.2mH±20%
Holding torque	9.5N.m
Dielectric strength	500V AC

CONNECTION MODE	RISTANCE (ohm±15%)	INDUCTANCE (mH±20%)	RATE CURRENT (A)	RATE VOLTAGE (V)
UNIPOLAR	0.8	4.2	4.0	4.48
SERIES BIPOAR	1.6	16.8	2.8	6.33
PARALLEL BIPOLAR	0.4	4.2	5.6	3.17

Rated voltage of electromagnetic brake: DC 24V; rated moment: 4N.m

MATERIAL	----						Y09-59D3-7658M
FINISH	----	--	'19-08-15	----	00 First version	Xu Yuanhao	
		SYM	DATE	REVISION NO.	REVISIONS	BY	NOTE

DRAWN	DESIGNED	CHECKED	CHECKED	SCALE	1:1	TITLE	MOTR SPECIFICATION	THIRD ANGLI PROJECTION
Dongguan Kaifull '19-08-15 Xu Yuanhao	Dongguan Kaifull '19-08-15 Xu Yuanhao					DWG.NO.	Y-20-1222-0	
						SHEET	1/1	