General technical parameters		Electrical technical parameters	
Stepping angle	1.8°	Rated voltage	24V DC
Number of phases	2	Rated current	6.3A
Insulation resistance	100MΩMIN(500V DC)	Resistance	0.33±15%Ω
Insulation level	Class B/winding	Inductance	2.7±20%mH
Weight	About 2700g	Holding torque	6.3N.m
Braking torque	1500gf.cm REF.	Moment of inertia	About 1850g.cm²

Wiring Diagram

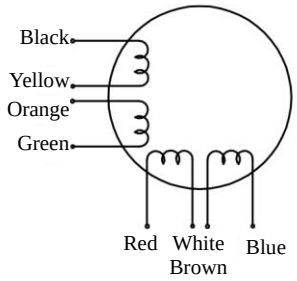

Overall dimension: unit=mm

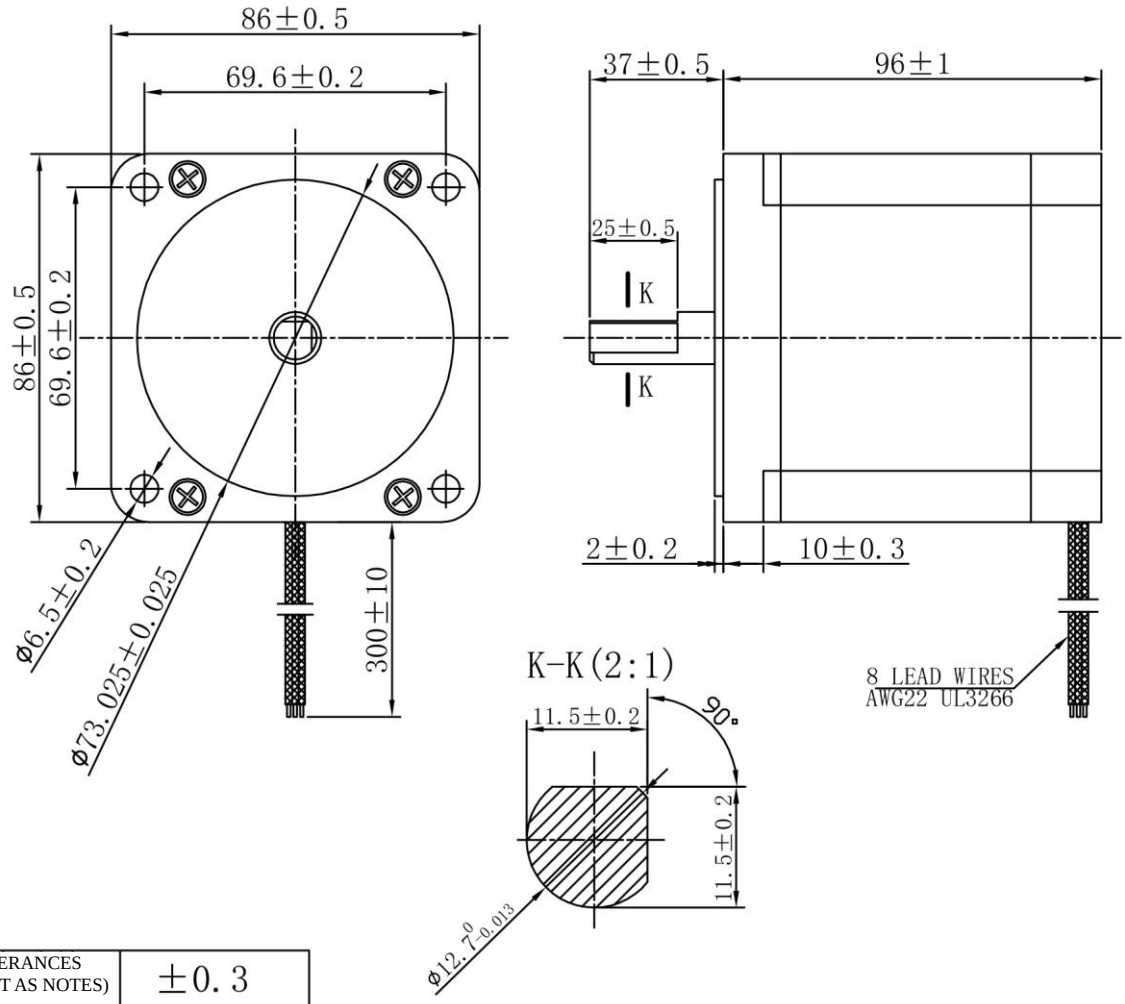

TOLERANCES (EXCEPT AS NOTES)	±0.3

MATERIAL	----						Y09-59D3-7536
FINISH	----						
		SYM	DATE	REVISION NO.	REVISIONS	BY	NOTE

DRAWN	DESIGNED	CHECKED	CHECKED	SCALE	1:1	TITLE	MOTR SPECIFICATION	THIRD ANGLI PROJECTION
Dongguan Kaifull 19-01-11 Xu Yuanhao	Dongguan Kaifull 19-01-11 Xu Yuanhao					DWG.NO.	Y-19-0111-0	
				Guangdong Kaifull Electronics Technology Co., Ltd.			SHEET	1/1