General technical parameters		Electrical technical parameters	
Stepping angle	1.2°	Rated voltage	24V DC
Number of phases	3	Rated current	5.8A
Insulation resistance	100MΩMIN(500V DC)	Resistance	0.5±15%Ω
Insulation level	Class B/winding	Inductance	1.3±20%mH
Weight	About 1300g	Holding torque	1.5N.m
Braking torque	500gf.cm REF.	Moment of inertia	About 460g.cm²

Wiring Diagram

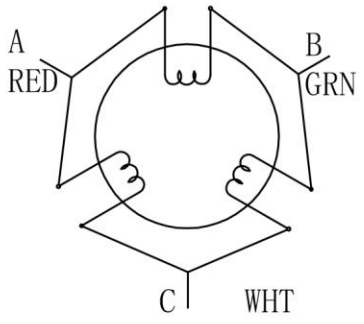

Overall dimension: unit=mm

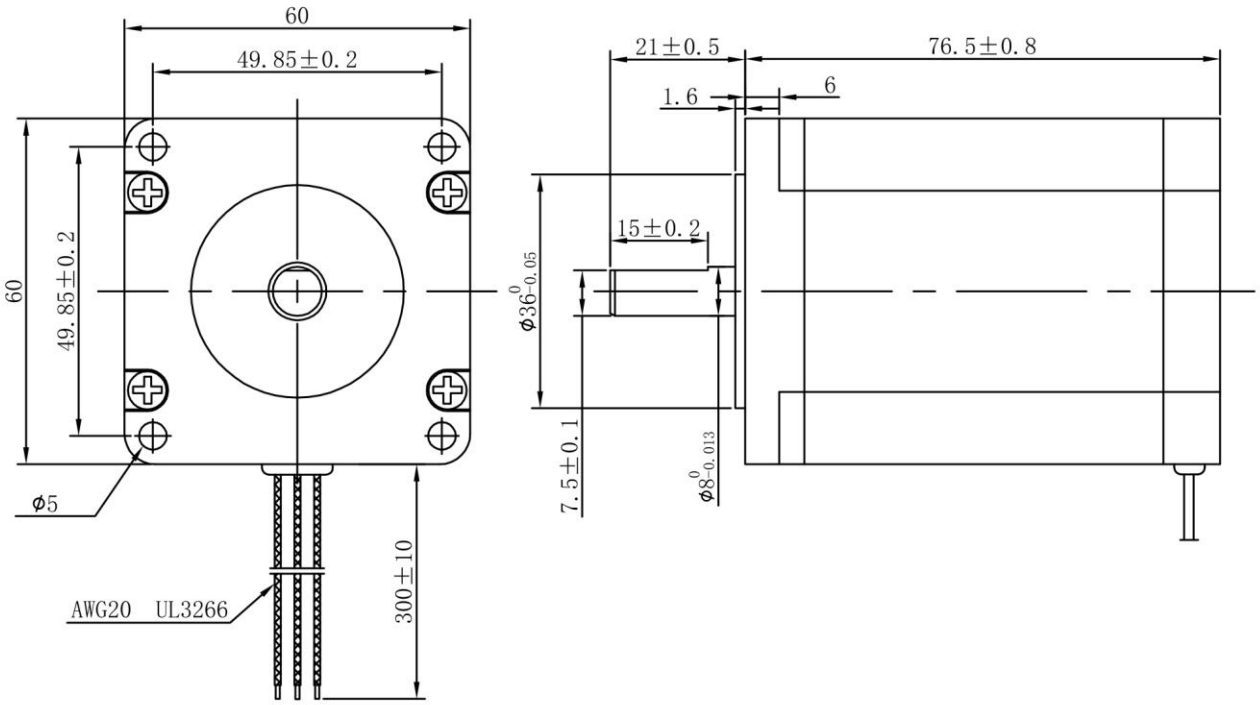

TOLERANCES (EXCEPT AS NOTES)	±0.3

MATERIAL	----						Y09-59D3-7360
FINISH	----						
		SYM	DATE	REVISION NO.	REVISIONS	BY	NOTE

DRAWN	DESIGNED	CHECKED	CHECKED	SCALE	1:1	TITLE	MOTR SPECIFICATION	THIRD ANGLI PROJECTION
Dongguan Kaifull 19-01-15 Xu Yuanhao	Dongguan Kaifull 19-01-15 Xu Yuanhao					DWG.NO.	Y-19-0115-0	
				Guangdong Kaifull Electronics Technology Co., Ltd.			SHEET	1/1