General technical parameters		Electrical technical parameters	
Stepping angle	1.8°	Rated voltage	24V DC
Number of phases	2	Rated current	4.2A
Insulation resistance	100MΩMIN(500V DC)	Resistance	0.39±15%Ω
Insulation level	Class B/winding	Inductance	1.1±20%mH
Weight	About 480g	Holding torque	1.0N.m
Braking torque	450gf.cm REF.	Moment of inertia	About 280g.cm²

Wiring Diagram

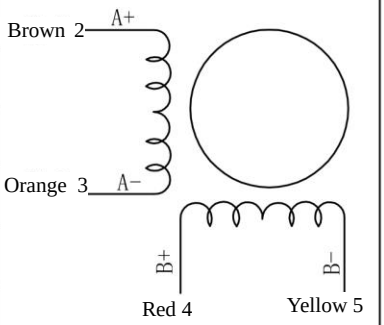

Overall dimension: unit=mm

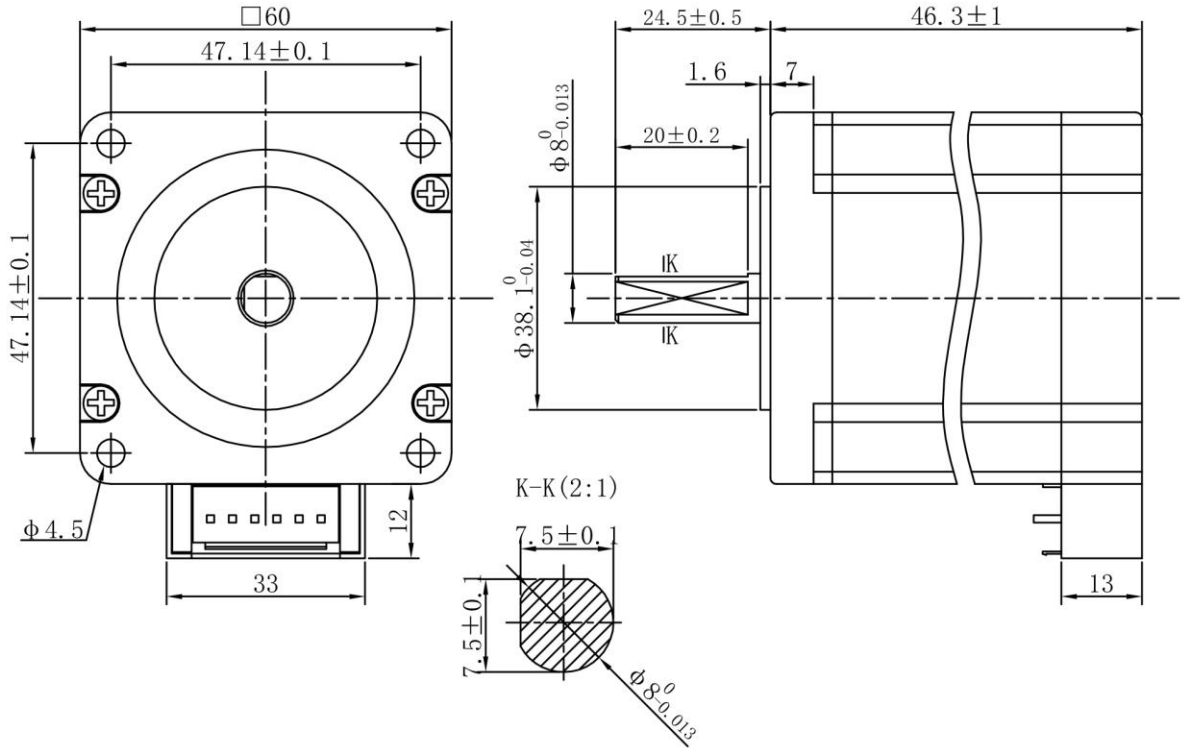

TOLERANCES (EXCEPT AS NOTES)	±0.3

MATERIAL	----						Y09-59D3-1305-P
FINISH	----						
		SYM	DATE	REVISION NO.	REVISIONS	BY	NOTE

DRAWN	DESIGNED	CHECKED	CHECKED	SCALE	1:1	TITLE	MOTR SPECIFICATION	THIRD ANGLI PROJECTION
Dongguan Kaifull 20-05-07 Xu Yuanhao	Dongguan Kaifull 20-05-07 Xu Yuanhao					DWG.NO.	Y-20-0507-0	
				Guangdong Kaifull Electronics Technology Co., Ltd.			SHEET	1/1