General technical parameters		Electrical technical parameters	
Stepping angle	1.8°	Rated voltage	24V DC
Number of phases	2	Rated current	3.0A (half winding) 2.1A (full winding)
Insulation resistance	100MΩMIN(500V DC)	Resistance	0.82±15%Ω
Insulation level	Class B/winding	Inductance	1.3±15%mH
Weight	About 710g	Holding torque	1.0N.m
Braking torque	600gf.cm REF.	Moment of inertia	About 245g.cm²

Wiring Diagram

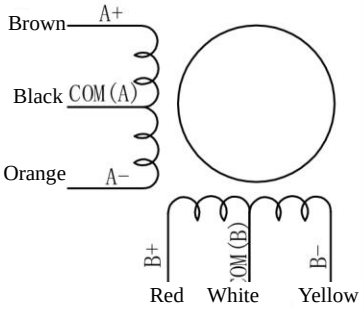

Overall dimension: unit=mm

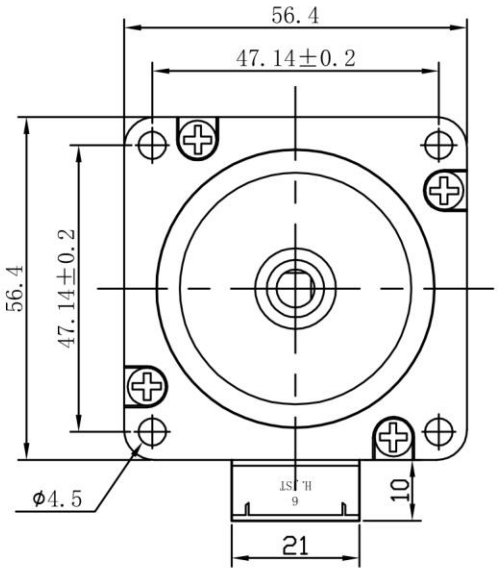

123456

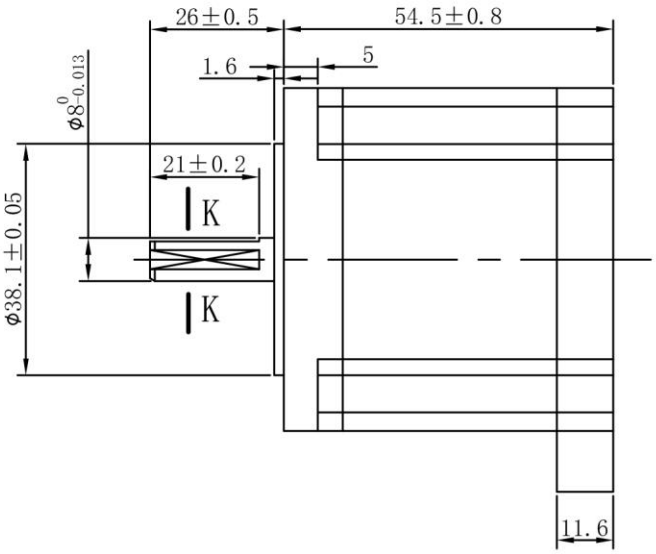

K-K(2:1)

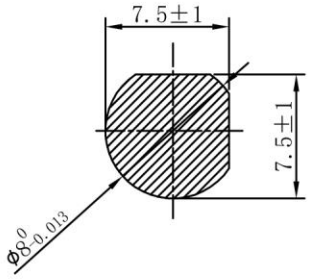

TOLERANCES (EXCEPT AS NOTES)	±0.3

MATERIAL	----						Y07-59D1-3039
FINISH	----						
		SYM	DATE	REVISION NO.	REVISIONS	BY	NOTE

DRAWN	DESIGNED	CHECKED	CHECKED	SCALE	1:1	TITLE	MOTR SPECIFICATION	THIRD ANGLI PROJECTION
Dongguan Kaifull 18-09-13 Xu Yuanhao	Dongguan Kaifull 18-09-13 Xu Yuanhao					DWG.NO.	Y-18-0913-0	
				Guangdong Kaifull Electronics Technology Co., Ltd.			SHEET	1/1