General technical parameters		Electrical technical parameters	
Stepping angle	1.8°	Rated voltage	24V DC
Number of phases	2	Rated current	4.2A
Insulation resistance	100MΩMIN(500V DC)	Resistance	0.6±20%Ω
Insulation level	Class B/winding	Inductance	2.2±20%mH
Weight	About 1100g	Holding torque	2.4N.m
Braking torque	1000gf.cm REF.	Moment of inertia	About 470g.cm²

Wiring Diagram

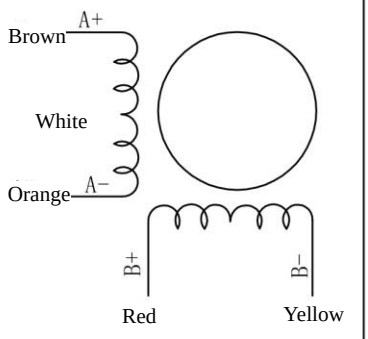

Overall dimension: unit=mm

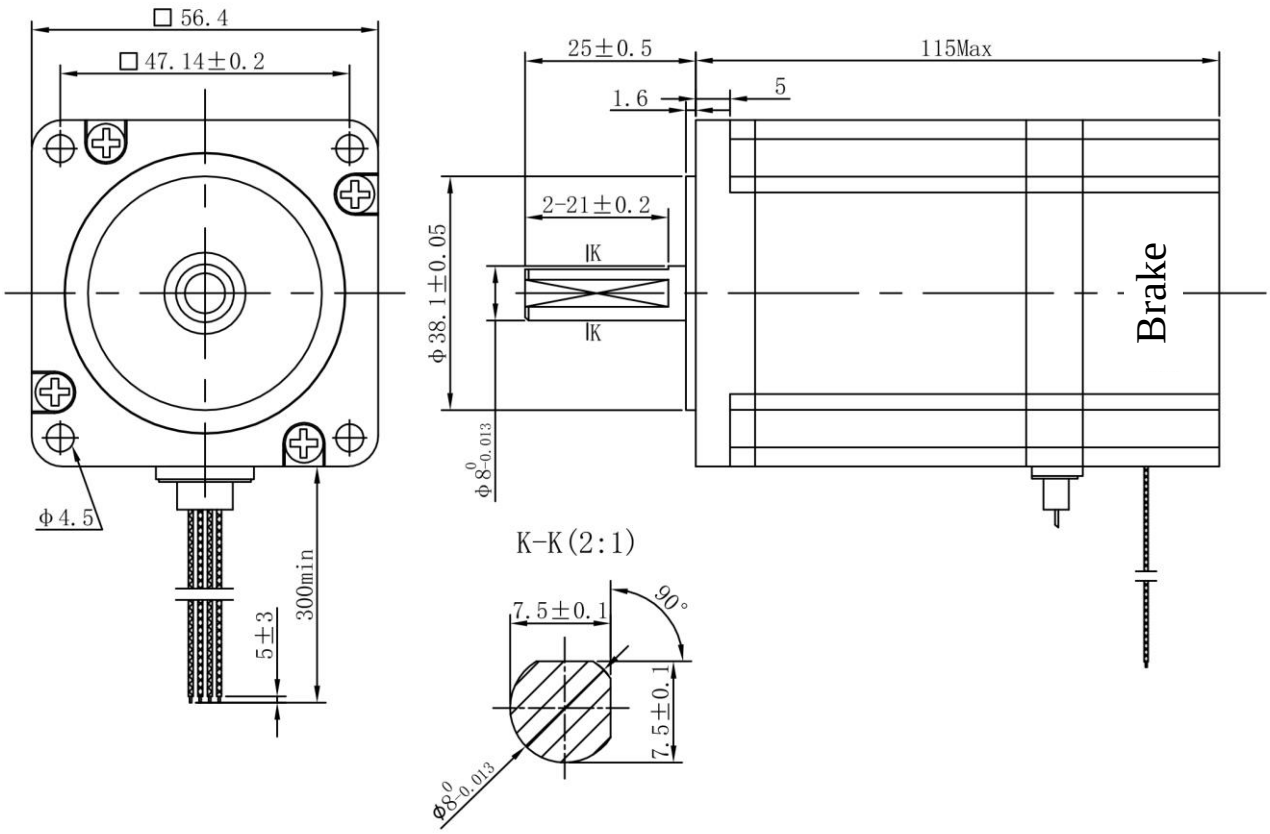

Brake type	Brake voltage	Brake power	Brake torque	Brake response time	Brake wiring
Power-off brake	DC24V	7.2W	1.5N.M	50ms	Black (24V+) Black (GND)

TOLERANCES (EXCEPT AS NOTES)	±0.3

MATERIAL	----						Y07-59D1-17155M
FINISH	----						
		SYM	DATE	REVISION NO.	REVISIONS	BY	NOTE

DRAWN	DESIGNED	CHECKED	CHECKED	SCALE	1:1	TITLE	MOTR SPECIFICATION	THIRD ANGLI PROJECTION
Dongguan Kaifull 20-02-05 Xu Yuanhao	Dongguan Kaifull 20-02-05 Xu Yuanhao					DWG.NO.	Y-19-0109-0	
				Guangdong Kaifull Electronics Technology Co., Ltd.			SHEET	1/1