General technical parameters		Electrical technical parameters	
Stepping angle	1.8°	Rated voltage	24V DC
Number of phases	2	Rated current	0.7A
Insulation resistance	100MΩMIN(500V DC)	Resistance	4.5±10%Ω
Insulation level	Class B/winding	Inductance	3.2±20%mH
Weight	About 110g	Holding torque	0.06N.m
Braking torque	30gf.cm REF.	Moment of inertia	About 8g.cm²

Wiring Diagram

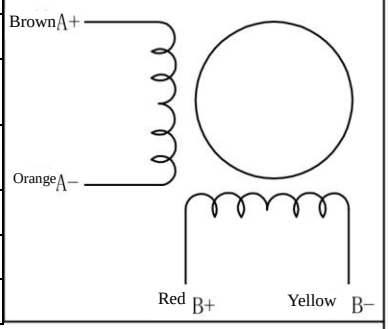

Overall dimension: unit=mm

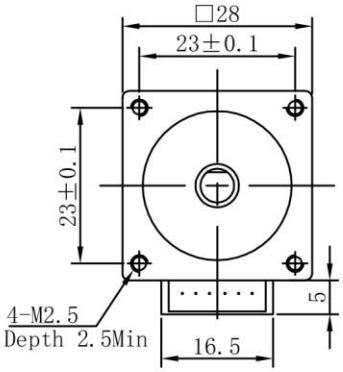

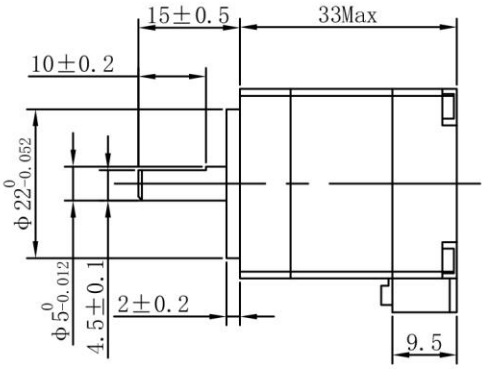

TOLERANCES (EXCEPT AS NOTES)	±0.3

MATERIAL	----						Y07-28D1-1070
FINISH	----						
		SYM	DATE	REVISION NO.	REVISIONS	BY	NOTE

DRAWN	DESIGNED	CHECKED	CHECKED	SCALE	1:1	TITLE	MOTR SPECIFICATION	THIRD ANGLI PROJECTION
Dongguan Kaifull 18-08-22 Xu Yuanhao	Dongguan Kaifull 18-08-22 Xu Yuanhao					DWG.NO.	Y-18-0822-0	
				Guangdong Kaifull Electronics Technology Co., Ltd.			SHEET	1/1