General technical parameters		Electrical technical parameters	
Stepping angle	1.8°	Rated voltage	24V DC
Number of phases	2	Rated current	0.6A
Insulation resistance	100MΩMIN(500V DC)	Resistance	10±10%Ω
Insulation level	Class B/winding	Inductance	3.6±20%mH
Weight	About 70g	Holding torque	0.022N.m
Braking torque	15gf.cm REF.	Moment of inertia	About 3g.cm²

Wiring Diagram

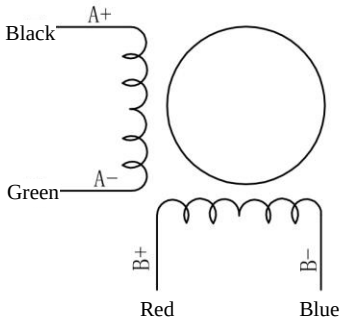

Overall dimension: unit=mm

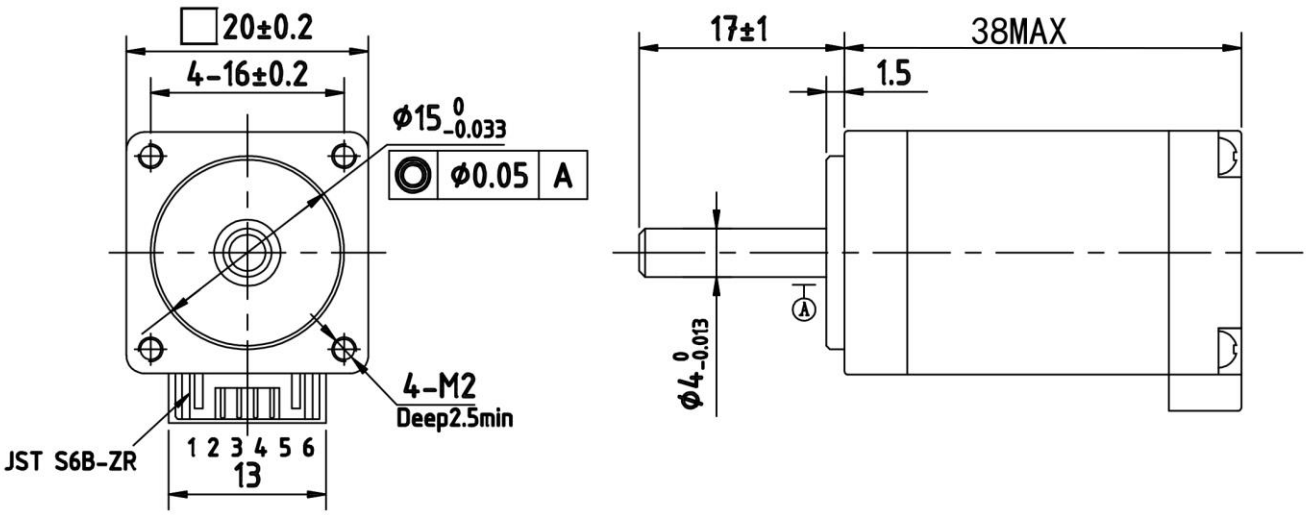

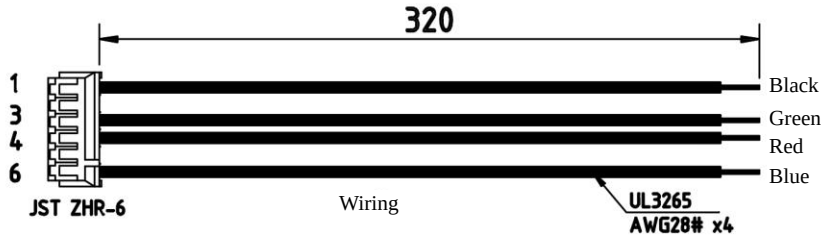

TOLERANCES (EXCEPT AS NOTES)	±0.3

MATERIAL	----						Y07-20D1-4401
FINISH	----						
		SYM	DATE	REVISION NO.	REVISIONS	BY	NOTE

DRAWN	DESIGNED	CHECKED	CHECKED	SCALE	1:1	TITLE	MOTR SPECIFICATION	THIRD ANGLI PROJECTION
Dongguan Kaifull 20-12-02 Xu Yuanhao	Dongguan Kaifull 20-12-02 Xu Yuanhao					DWG.NO.	Y-20-1202-0	
				Guangdong Kaifull Electronics Technology Co., Ltd.			SHEET	1/1