General technical parameters		Electrical technical parameters		Wiring Diagram
Stepping angle	1.8°	Rated voltage	24V DC	
Number of phases	2	Rated current	3A	
Insulation resistance	100MΩMIN(500V DC)	Resistance	1.1±15%Ω	
Insulation level	Class B/winding	Inductance	3.2±20%mH	
Weight	About 620g	Holding torque	1300mN.m	
Step length	0.05MM	Moment of inertia	About 280g.cm²	

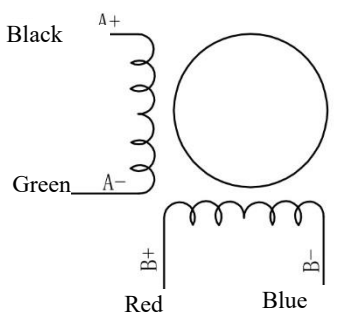

Overall dimension: unit=mm

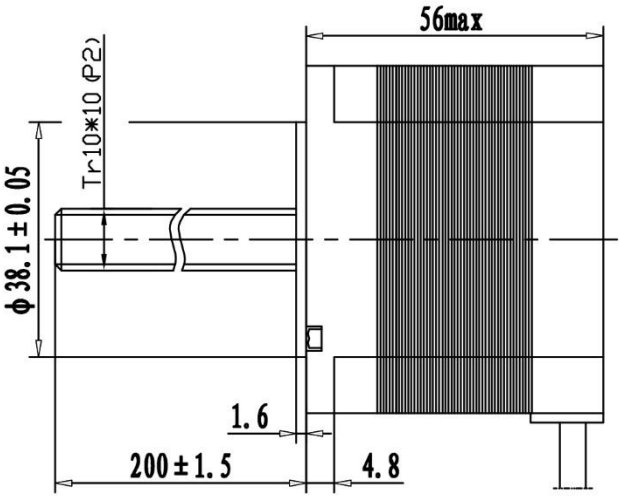

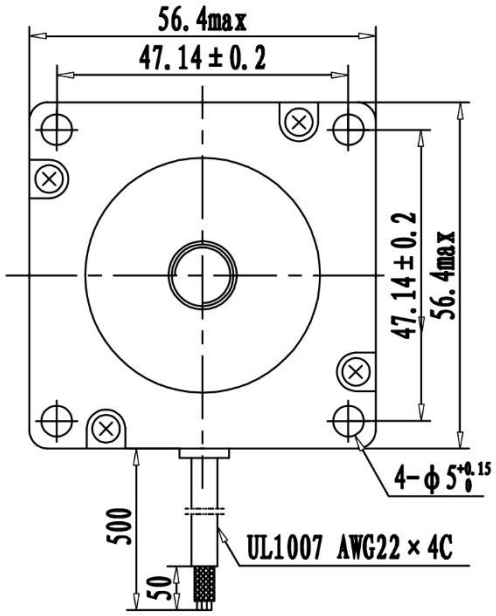

Nut material: Black POM

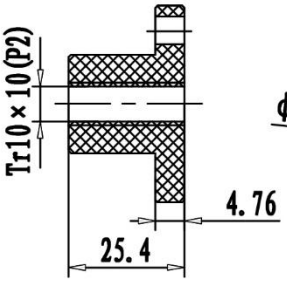

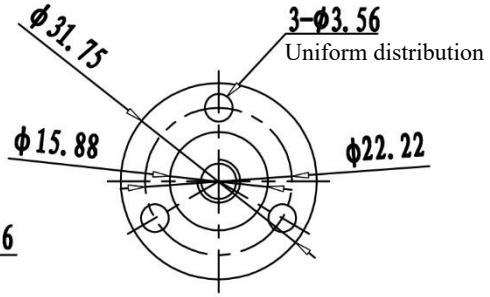

TOLERANCES (EXCEPT AS NOTES)	±0.3

MATERIAL	----						Y07-59D1-4404-10L C-200
FINISH	----						
		SYM	DATE	REVISION NO.	REVISIONS	BY	NOTE

DRAWN	DESIGNED	CHECKED	CHECKED	SCALE	FREE	TITLE	MOTR SPECIFICATION	THIRD ANGLI PROJECTION
Dongguan Kaifull 18-07-25 Xu Yuanhao	Dongguan Kaifull 18-07-25 Xu Yuanhao					DWG.NO.	Y-18-0726-0	
				Guangdong Kaifull Electronics Technology Co., Ltd.			SHEET	1/1