General technical parameters		Electrical technical parameters		Wiring Diagram
Stepping angle	1.8°	Rated voltage	24V DC	
Number of phases	2	Rated current	3.0A	
Insulation resistance	100MΩMIN(500V DC)	Resistance	1.1±15%Ω	
Insulation level	Class B/winding	Inductance	3.2±20%mH	
Weight	About 700g	Holding torque	1.3N.m	
Step length	0.02MM	Moment of inertia	About 280g.cm²	

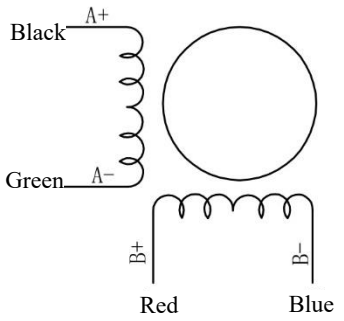

Overall dimension: unit=mm

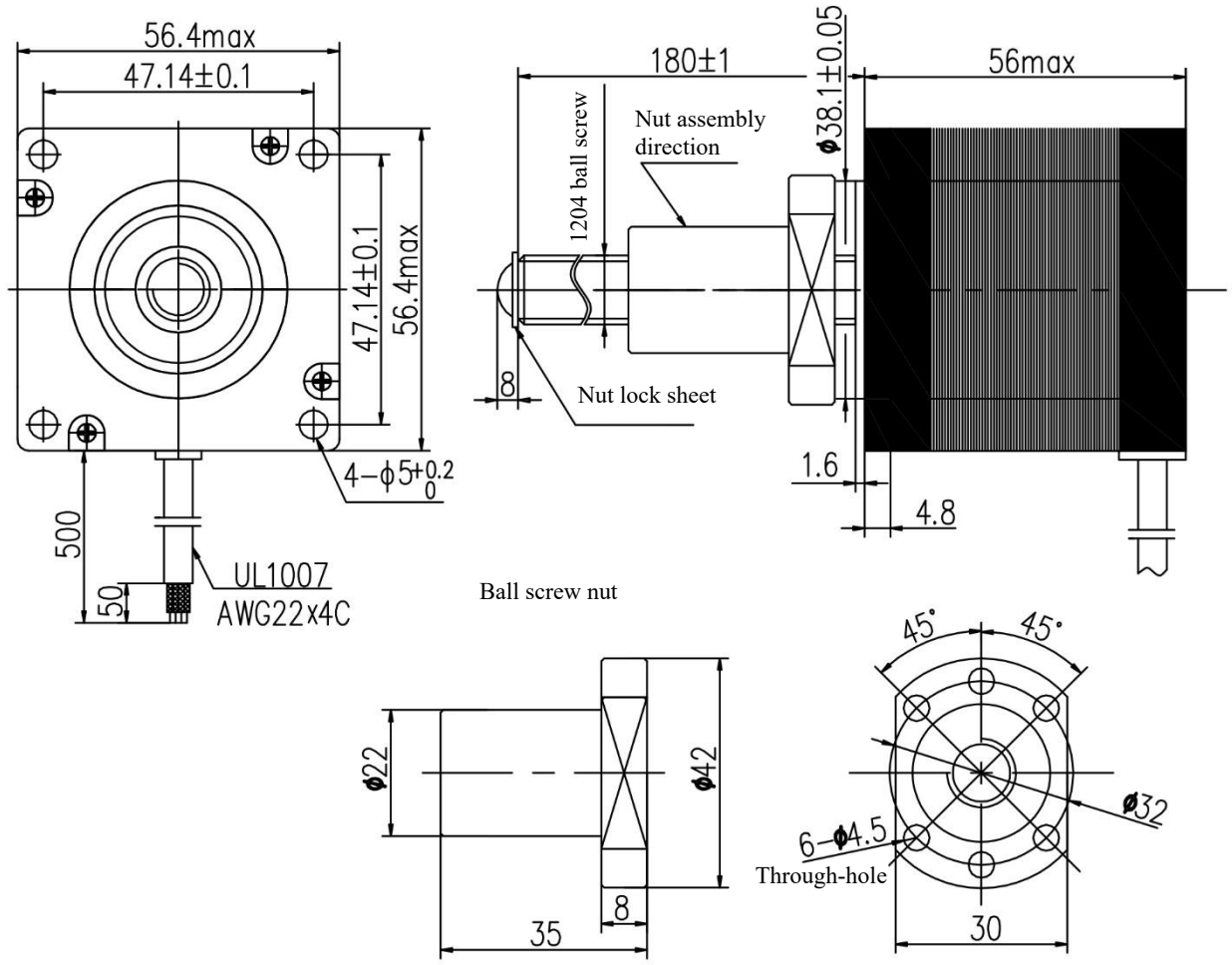

TOLERANCES (EXCEPT AS NOTES)	±0. 3

MATERIAL	----						Y07-59D1-4404-04G Z-180
FINISH	----						
		SYM	DATE	REVISION NO.	REVISIONS	BY	NOTE

DRAWN	DESIGNED	CHECKED	CHECKED	SCALE	1:1	TITLE	MOTR SPECIFICATION	THIRD ANGLI PROJECTION
Dongguan Kaifull 19-02-28 Xu Yuanhao	Dongguan Kaifull 19-02-28 Xu Yuanhao					DWG.NO.	Y-19-0228-0	
				Guangdong Kaifull Electronics Technology Co., Ltd.			SHEET	1/1