General technical parameters		Electrical technical parameters	
Stepping angle	1.8°	Rated voltage	24V DC
Number of phases	2	Rated current	3A
Insulation resistance	100MΩMIN(500V DC)	Resistance	1.1±15%Ω
Insulation level	Class B/winding	Inductance	3.2±20%mH
Weight	About 680g	Holding torque	1.3N.m
Step length	0.02MM	Moment of inertia	About 280g.cm²

Wiring Diagram

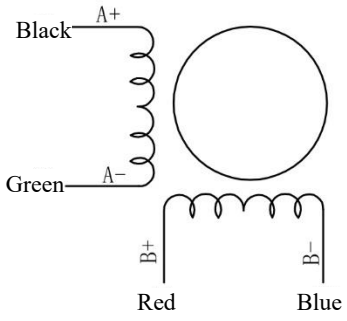

Overall dimension: unit=mm

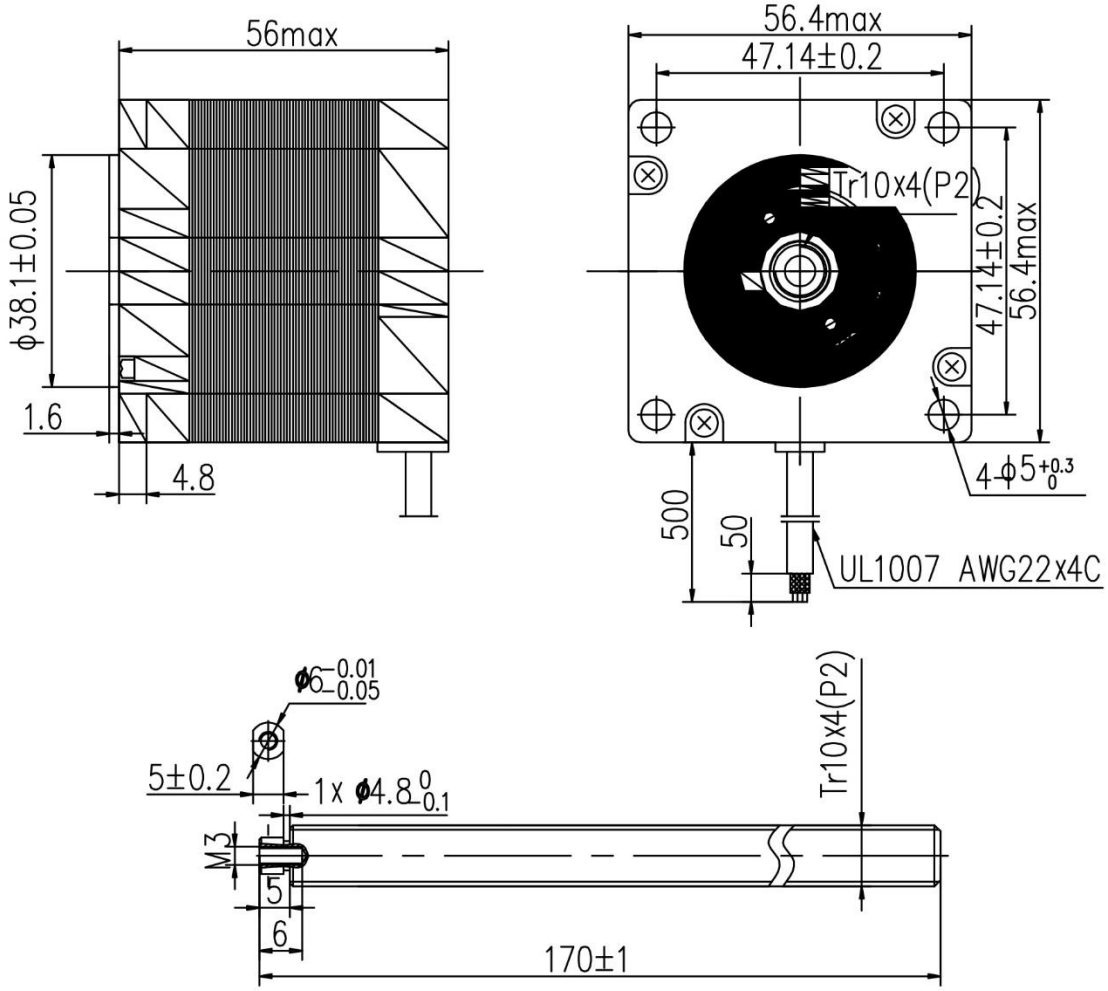

TOLERANCES (EXCEPT AS NOTES)	±0. 3

MATERIAL	----						Y07-59D1-4404-04G C-170
FINISH	----						
		SYM	DATE	REVISION NO.	REVISIONS	BY	NOTE

DRAWN	DESIGNED	CHECKED	CHECKED	SCALE	FREE	TITLE	MOTR SPECIFICATION	THIRD ANGLI PROJECTION
Dongguan Kaifull 18-08-01 Xu Yuanhao	Dongguan Kaifull 18-08-01 Xu Yuanhao					DWG.NO.	Y-18-0801-0	
				Guangdong Kaifull Electronics Technology Co., Ltd.			SHEET	1/1