General technical parameters		Electrical technical parameters	
Stepping angle	1.8°	Rated voltage	24V DC
Number of phases	2	Rated current	1.2A
Insulation resistance	100MΩMIN(500V DC)	Resistance	1.9±15%Ω
Insulation level	Class B/winding	Inductance	4.5±20%mH
Weight	About 350g	Holding torque	320mN.m
Step length	0.04MM	Moment of inertia	About 57g.cm²

Wiring Diagram

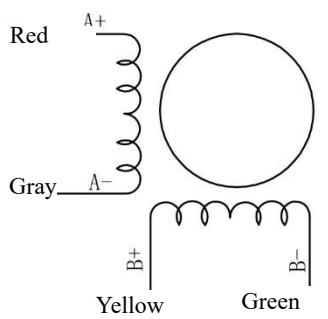

Overall dimension: unit=mm

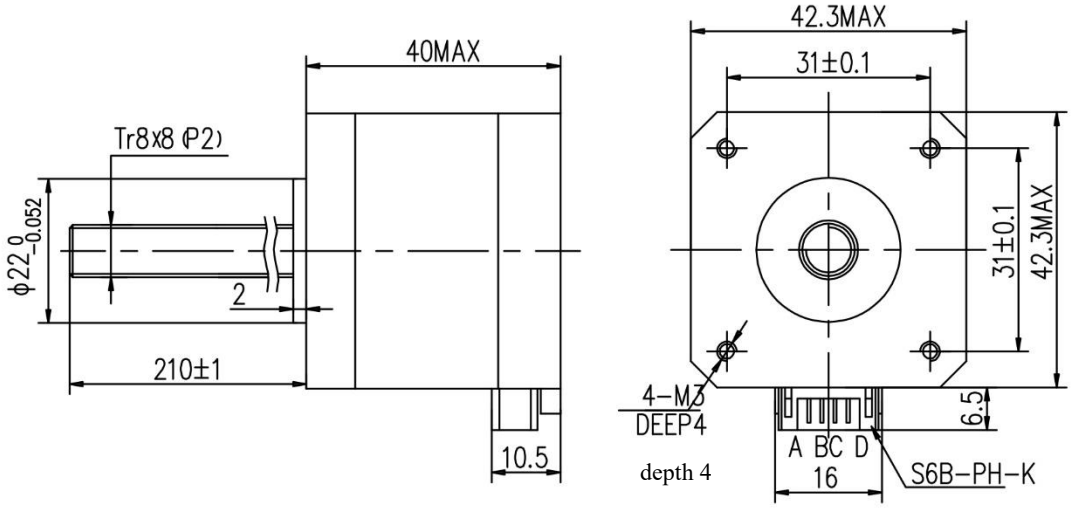

Nut material: Black POM

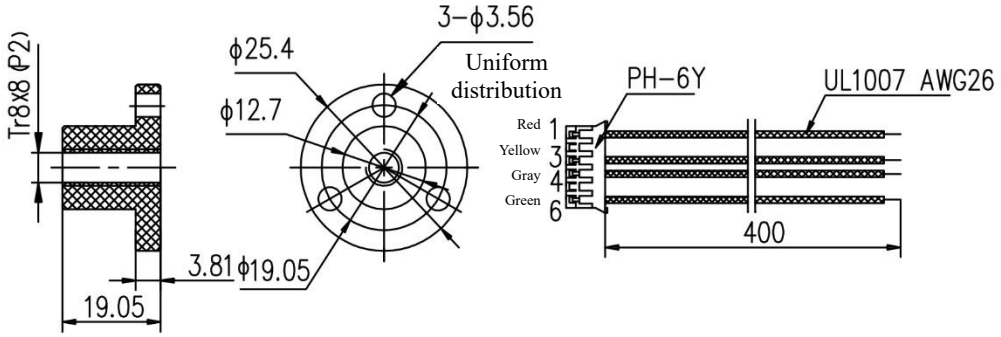

TOLERANCES (EXCEPT AS NOTES)	±0.3

MATERIAL	----						Y07-43D1-3001-08L C-210
FINISH	----						
		SYM	DATE	REVISION NO.	REVISIONS	BY	NOTE

DRAWN	DESIGNED	CHECKED	CHECKED	SCALE	FREE	TITLE	MOTR SPECIFICATION	THIRD ANGLI PROJECTION
Dongguan Kaifull 18-07-25 Xu Yuanhao	Dongguan Kaifull 18-07-25 Xu Yuanhao					DWG.NO.	Y-18-0725-0	
				Guangdong Kaifull Electronics Technology Co., Ltd.			SHEET	1/1