General technical parameters		Electrical technical parameters	
Stepping angle	1.8°	Rated voltage	24V DC
Number of phases	2	Rated current	1.5A
Insulation resistance	100MΩMIN(500V DC)	Resistance	1.56±15%Ω
Insulation level	Class B/winding	Inductance	2.4±20%mH
Weight	About 200g	Holding torque	260mN.m
Step length	0.01MM	Moment of inertia	About 38g.cm²

Wiring Diagram

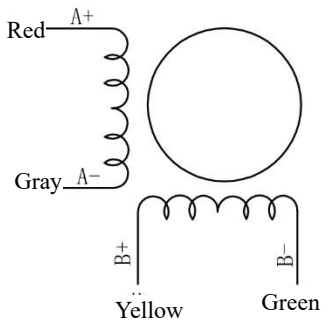

Overall dimension: unit=mm

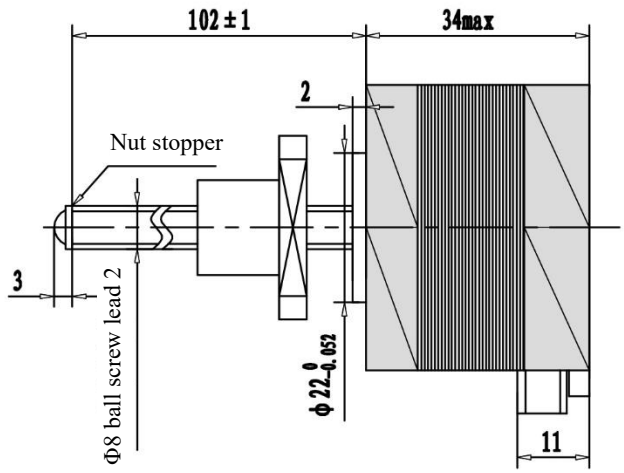

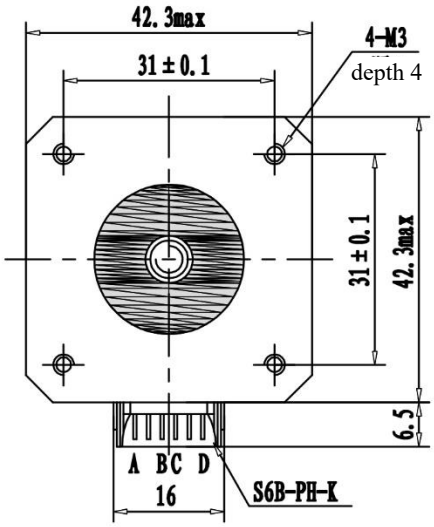

Ball screw nut

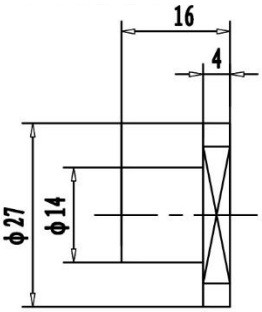

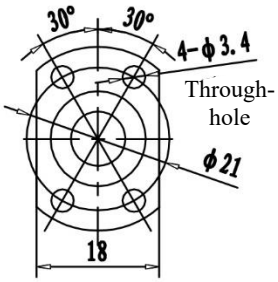

Harness assembly

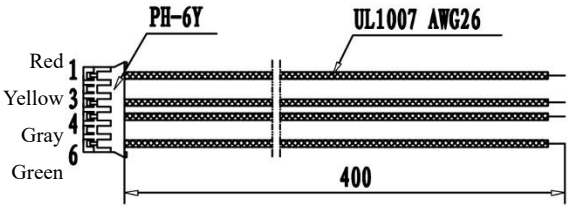

TOLERANCES (EXCEPT AS NOTES)	±0.3

MATERIAL	----						Y07-43D1-1070-02G Z-102
FINISH	----						
		SYM	DATE	REVISION NO.	REVISIONS	BY	NOTE

DRAWN	DESIGNED	CHECKED	CHECKED	SCALE	FREE	TITLE	MOTR SPECIFICATION	THIRD ANGLI PROJECTION
Dongguan Kaifull 21-05-21 Xu Yuanhao	Dongguan Kaifull 21-05-21 Xu Yuanhao					DWG.NO.	Y-18-0808-0	
				Guangdong Kaifull Electronics Technology Co., Ltd.			SHEET	1/1