General technical parameters		Electrical technical parameters	
Stepping angle	1.8°	Rated voltage	24V DC
Number of phases	2	Rated current	0.6A
Insulation resistance	100MΩMIN(500V DC)	Resistance	9±15%Ω
Insulation level	Class B/winding	Inductance	3±20%mH
Weight	About 180g	Holding torque	22mN.m
Step length	0.005MM	Moment of inertia	About 3g.cm²

Wiring Diagram

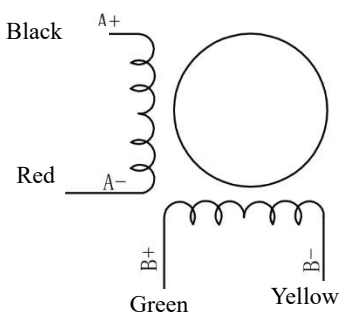

Overall dimension: unit=mm

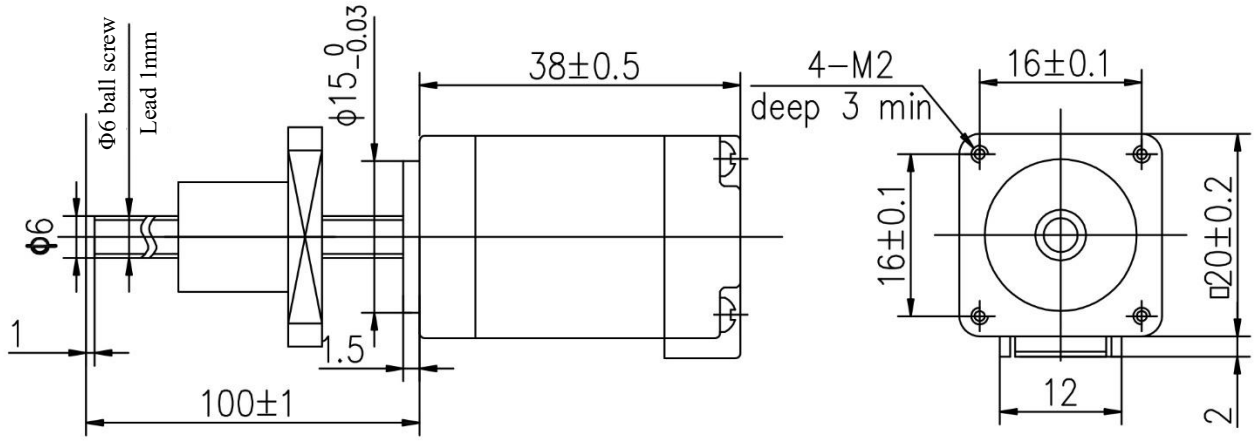

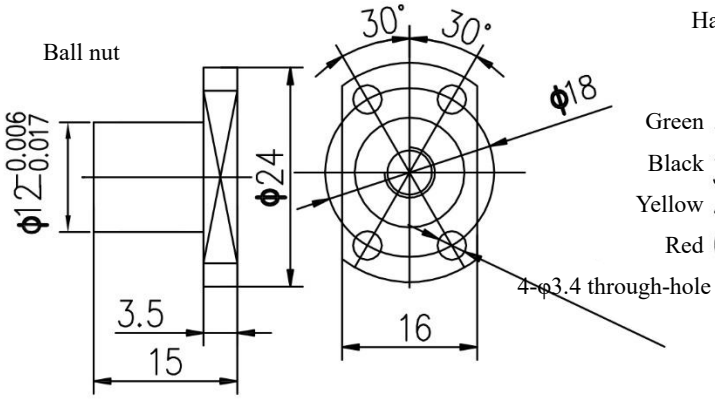

Harness assembly drawing number

Connector HX12500-6Y(51021)

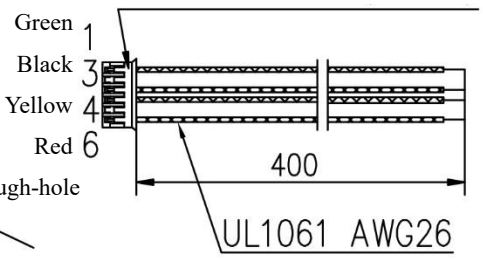

TOLERANCES (EXCEPT AS NOTES)	±0.3

MATERIAL	----						Y07-20D1-1002-01G Z-100
FINISH	----						
		SYM	DATE	REVISION NO.	REVISIONS	BY	NOTE

DRAWN	DESIGNED	CHECKED	CHECKED	SCALE	FREE	TITLE	MOTR SPECIFICATION	THIRD ANGLI PROJECTION
Dongguan Kaifull 18-10-10 Xu Yuanhao	Dongguan Kaifull 18-10-10 Xu Yuanhao					DWG.NO.	Y-18-1010-0	
				Guangdong Kaifull Electronics Technology Co., Ltd.			SHEET	1/1