Customer name:

Input end

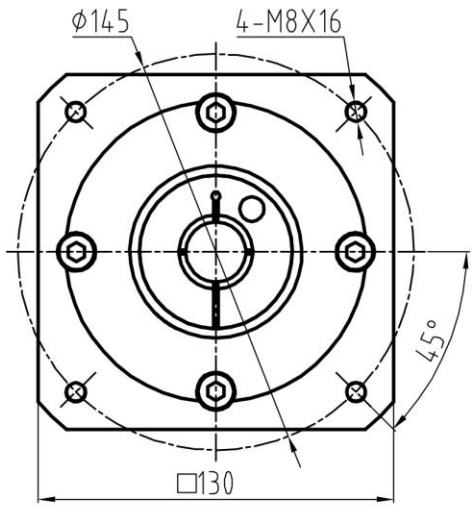

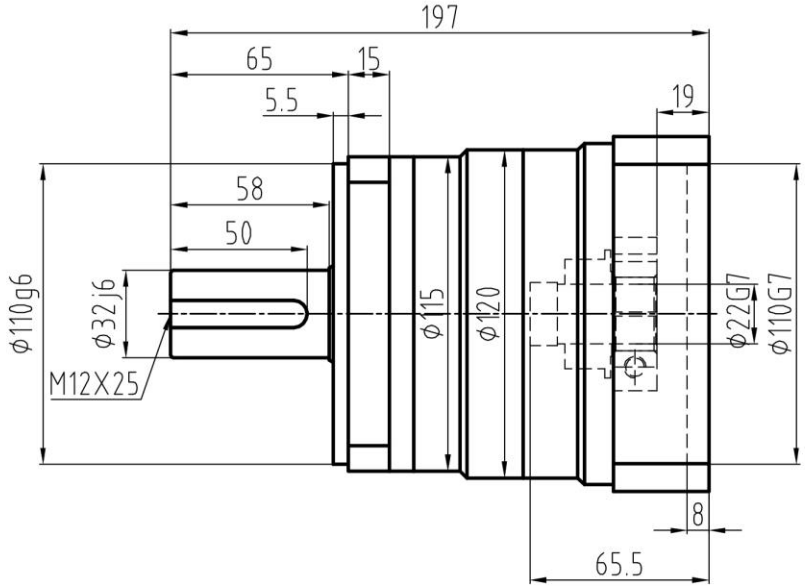

Output end

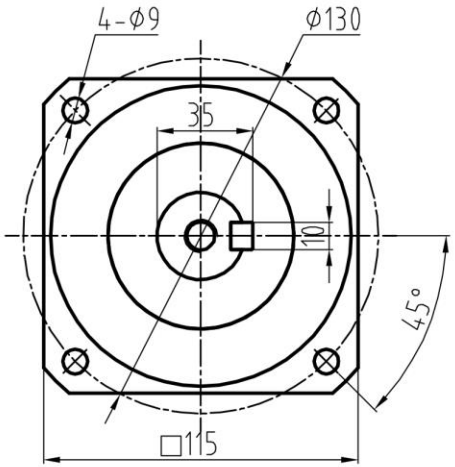

Full load efficiency: 98%
Rated input speed: 3000min^{-1}
Lubrication method: Synthetic grease lubrication (long-term lubrication)
Average service life: 20000h
Return clearance (precision): <3arcmin
Return clearance (economic type):<5arcmIn

Working temperature: -25°~+90 °
Maximum input speed: 6000 min^{-1}
Installation method: At will

Select speed ratio	i=
Customer's signature	

AF115-L1-[ ]-K[ ]-32-001-YT-22-A1

Matching motor size: φ22×55/φ110×3/4-φ9-φ145

Parameter	Transmission ratio	3	4	5	7	10
Rated output torque Nm		230	270	255	180	120
Fault stop torque Nm		2-time rated output torque				
Moment of inertia Kgcm^2		3.3	2	1.6	1.1	0.95
Permissible radial load N		3000				
Permissible axial load N		2500				

Design	Liu Jinghua					AF115 single-level dimensional drawing
Checked by						
Standardization			Drawing mark	Weight	Scale	AF-115-[ ]-K[ ]-22
Review						
Approval						