Jetta Motor

版本号：A1

产品规格书
PRODUCT SPECIFICATION

FILLED BY JETTA	文件编号 Spec No.	JETTA-001
	品名 Part Name	线性振动马达 Linear Vibration Motor
	型号 Model No.	JT0832AA0160F
	批准 Approval	JETTA

FILLED BY BUYER	客户名称 Buyer Name	
	客户料号 Buyer Part No.	
	客户承认签章 Buyer Approved Signatures	

- 目录/List -

封面/Cover 1/14

目录/Contents 2/14

修改记录/ModificationRecords 3/14

1. 适用范围/Applicable Scope 4/14
2. 使用条件/Operating Conditions 4/14
3. 测试条件/Test Conditions 4/14
4. 性能标准/characteristics Standard 5~6/14
5. 机械性能/Mechanical Characteristics 7/14
6. 测定方法/DeterminationCondition 8/14
7. 可靠性实验/ReliabilityTest 9~10/14
8. 判断特性/Requirementsafterreliabletest 10/14
9. 使用注意事项/Cautions in Use 11/14
10. 环保要求/EnvironmentalProtectionRequirements 12/14
11. 包装/Packaging 13/14
12. 外形图/Mechanical Drawing 14/14

修改记录/Modification Records

版本/ Ver	拟制日期 /Date	更改理由/ Reason of Modification	主要更改内容/Revised contents
REV.0	2022.12.01	产品发布	
REV.01	2023.11.14		更新测试条件

1、适用范围/General

本规格书适用于线性振动马达 0832AA 系列。

This specification applies to linear type motor 0832AA series.

2、使用条件/Operating conditions

项目/Item		规格/Specification
2-1	额定电压/Rated Voltage	1.8VrmsAC, Sine wave
2-2	使用电压范围/Operating Voltage	0.1~1.9VrmsAC
2-3	输入频率/Input Frequency	235±5Hz
2-4	振动方向/Direction of vibration	Z axis
2-5	使用环境/Operating Environment	-20℃~+60℃，Ordinary Humidity:65±20%RH
2-6	保存条件/Storage Conditions	-40℃~+80℃，Ordinary Humidity:65±20%RH

3、测定条件/Determination Conditions

一般情况下，马达可以在 22~28℃，相对湿度 45~85%RH 的环境中测试.为保证一致性，测试应在下表规定内进行 Normally, the motor could be tested under 22~28℃,45~85%RH. To ensure the coherence, it must be tested under below environment requirements:

项目/Item		规格/Specification
3-1	温度/Temperature	25℃±3℃
3-2	湿度/Humidity	65±20%RH
3-3	气压/Air Pressure	1011±40 hpa

4、性能标准/ characteristics Standard

项目/Item		规格/Specification	测试条件/Test Condition
4-1	额定电压 Rated Voltage	1.8VrmsAC, Sine wave	1.8VrmsAC, Sine wave
4-2	额定电流 Rated Current	Max90mArms	Input source : F0, 1.8Vrms AC, sine wave
4-3	F0 点振动量 Acceleration	1.2~1.7Grms	
4-4	频率特性 Frequency Characteristics	235±5Hz Refer to Figure 1	
4-5	上升时间 Rise Time	Max 50msec From 0 to 50% of nominal vibration 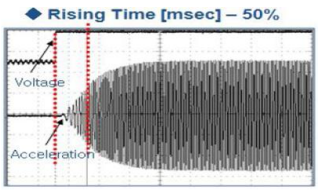	Input source : F0, 1.8Vrms AC, sine wave
4-6	下降时间 Falling Time	Max 80msec From 100% to 50% of nominal vibration 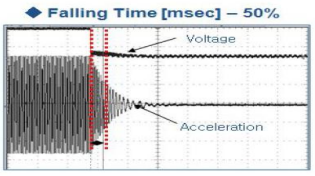	Input source : F0, 1.8Vrms AC, sine wave
4-7	绝缘电阻 Insulation Resistance	10MΩ Min (100V)	在 100V 直流电压下机壳与导线/At DC 100V Between wire and case
4-8	阻抗 Resistance	24Ohm±10%	在 25℃下/Below 25℃

Acceleration Characteristics

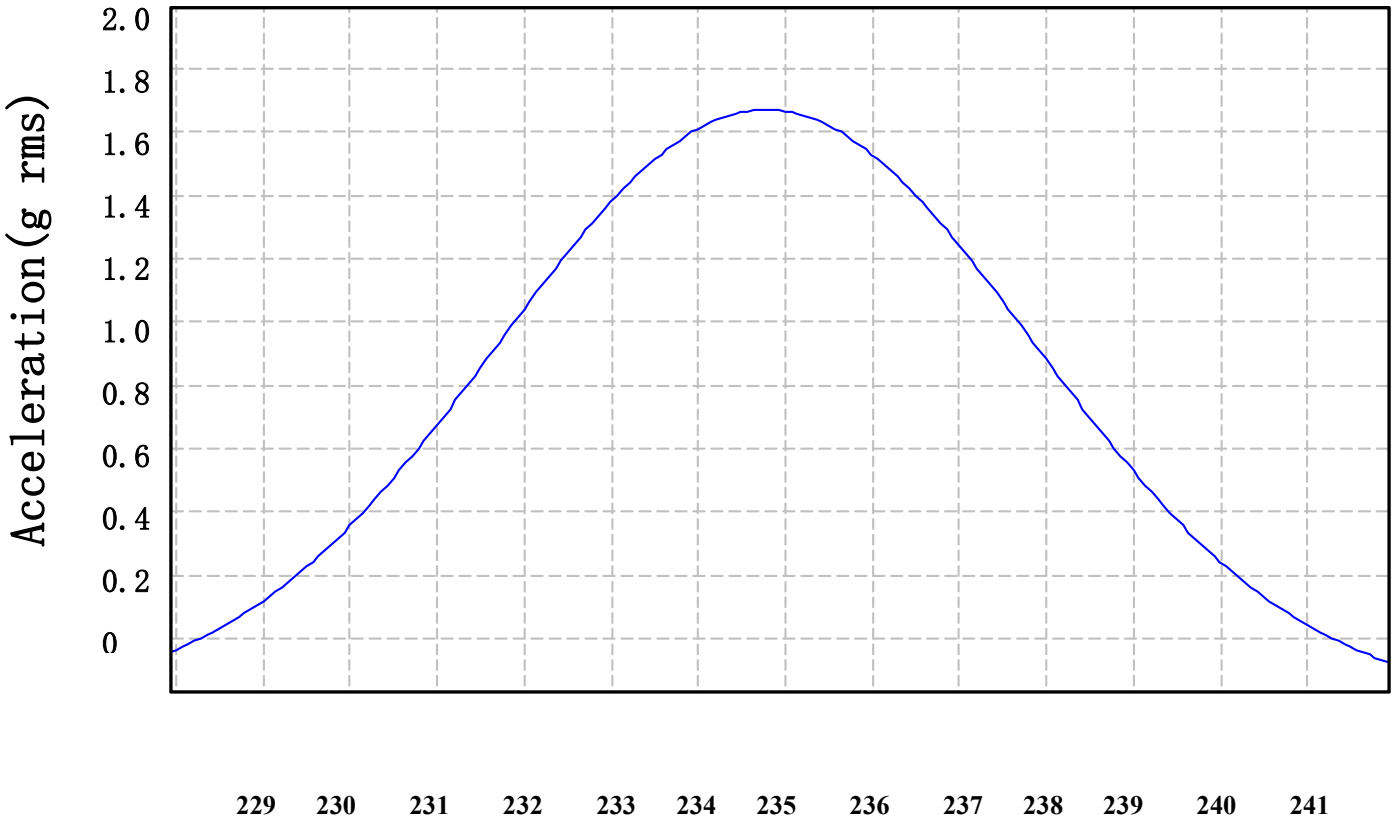

Figure 图一

5、机械性能/Mechanical characteristics

项目/Item		规格/Specification	测试条件/Test Conditions
5-1	噪音/Noise	45分贝最大/45 dB Max. (10cm distance from microphone/ 距离麦克风 10 cm 的位置	Input source : F0， 1.8VrmsAC,sinewave) 在额定电压下。 At rated voltage 背景噪音：不大于28dB.A计权 Back ground noise 28dB(A) Max 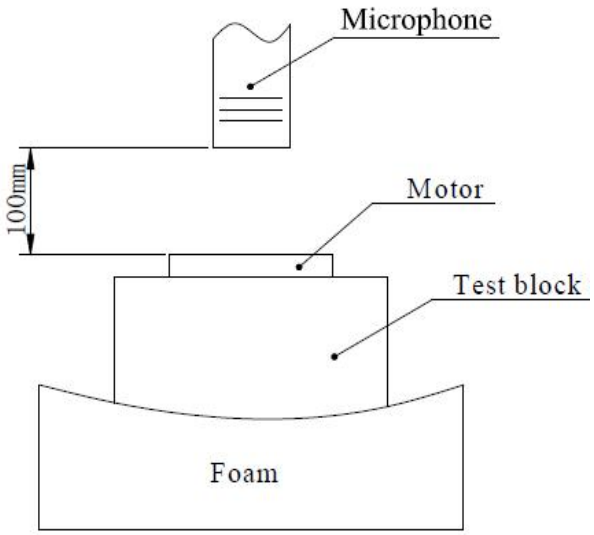
5-2	马达尺寸 Size of motor	Φ8*3.25mm	slide calipers
5-3	原子线抗拉强度 Anti-pulling strength of atomic line	最小 5N/5N(0.5kgf) Min	破坏性测试，对原子线沿着轴向施加推力 Destructive test, give pulling force to the atomic line along to the axial direction.

6、测试方法/Test Method

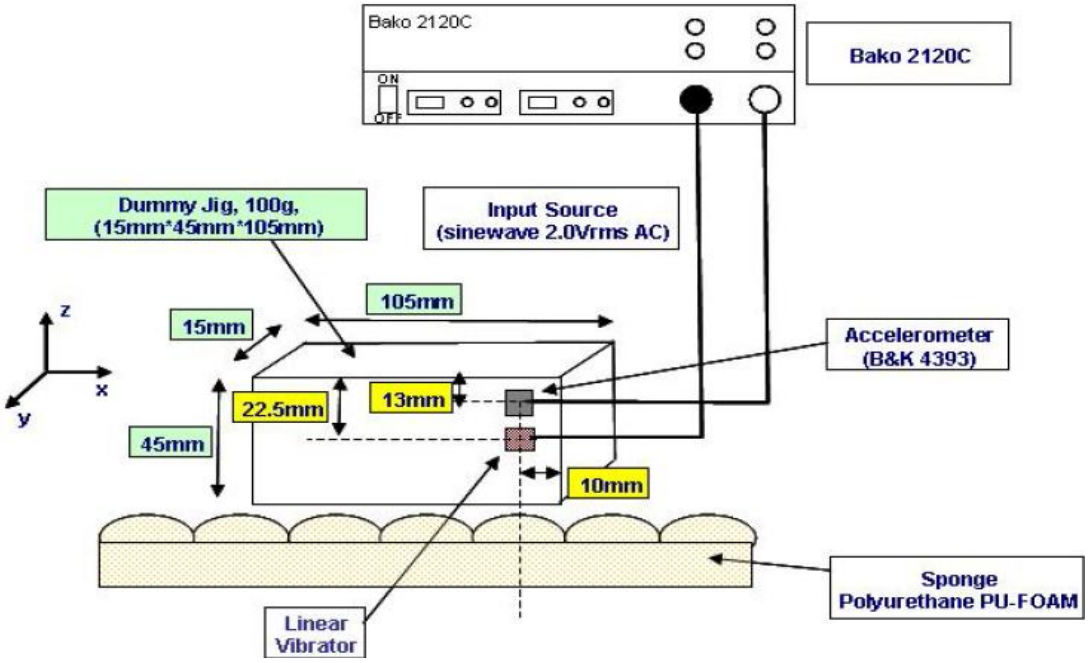

An Example of Measurement Method of Figure 2 测试方法 图 2

6-1 线性马达加速度测试安装位置(参考图 2)
Linear Vibrator/ Accelerometer mounting position (refer to Figure1)
6-2 线性马达/加速度测试 sensor
Linear Vibrator/Accelerometer
6-3 线性马达测试虚拟 Jig 厚度 15mm
Linear Vibrator Dummy Jig 15mm
6-4 虚拟 JIG 位置尺寸
Dummy Jig position
6-5 虚拟 Jig 15mm*105mm
Dummy Jig 15mm*105mm
6-6 虚拟 Jig 应放置在泡棉上
Dummy Jig should be located on Sponge
6-7 加速度测试条件
Measurement of Acceleration/
6-8 输入电压：1.8VrmsAC, sine wave
Input Source (1.8VrmsAC, sine wave)
6-9 输入电压 2~3 后，测定线性马达的加速度
Acceleration of Linear Vibrator should be measured 2~3second later when source inputed (1.8VrmsAC,sine wave)
6-10 为了保证测定的精确性，测定三次取三次平均值
For the precise measurement, Acceleration of Linear Vibrator is average data (repeat3 time)

7.可靠性实验/Reliability Test

项目/Item		测试条件/Test Condition	判定标准/Judgment
7-1	寿命 Life time test	1、试验循环/Test cycle:1,000,000 cycle (1cycle：2sec on/1sec off) 2、测试设备/Test equipment：寿命试验机/Lifetime test machine. 3、输入电压(1.8VrmsAC, Sine wave),输入频率：235HZ Input voltage : 1.8VrmsAC,Sine -wave), Input frequency(235Hz)	试验后,马达应符合 8-1 项的要求/ The test result should meet the requirements of item 8-1.
7-2	低温放置 Low temperature storage test	温度/Temperature:-40±2℃ 时间/Time :96H	在常温下放置 4 小时后，马达应符合 8-2 项要求/ After 4-hour storage, the test result should meet the requirements of item 8-2.
7-3	高温放置 High temperature storage test	温度/Temperature:+80±2℃ 时间/Time :96H	
7-4	湿度放置 Humidity storage test	温度/Temperature:+60±2℃ 湿度/Humidity :95%RH 时间/Time :96H 无水气凝结/No condensation of moisture	
7-5	振动 Vibration test	1、马达固定治具重量 180g The motor fixed fixture weight 180g 2、全振幅/Double amplitude:1.5mm(p-p) 3、频率/Frequency:10~55Hz 4、加速度/Acceleration:22m/s 5、周期/Period:10min 范围内（10~55~10Hz）/10Minutes log sweep(10~55~10Hz) 6、条件/Condition:在样机中，在 3 个直的轴方向每个方向做 1H 测试/ Do the test at three straight shaft directions for ten minutes to the samples.	测试结果应符合 8-2 项要求/ The test result should meet the requirements of item 8-2.

7-6	自然跌落 Drop test	1、试验状态/Test status:将马达固定在重量约180g（包括马达本身）的物体上，落向水泥地面/Fix the motor on a object weighted about 180g (include the motor) and drop it to the cement floor. 2、高度/Height:1.5m 3、方向/Diretion : ±X，±Y，±Z 4、次数/ Number of the test:每个方向 3 次/ times for each direction	测试结果应符合 8-2 项的要求/ The test result should meet the requirements of item 8-2.
7-7	温度冲击试验 Temperature shock test	测试模式/Test mode: 1 hour at -40℃,1 hour at 85℃,as one cycle,Transfer time between extreme temperatures:<5 分钟/5min 循环次数：15cycles 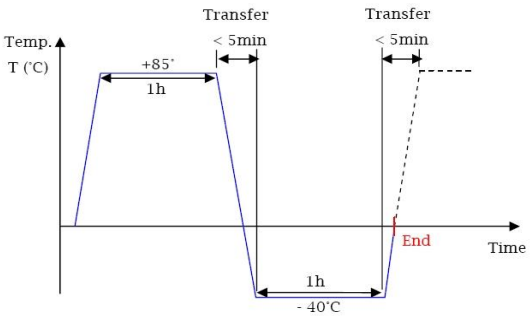	在常温下放置 2 小时后，测试结果应符合 8-2 项要求/ After 2 hour exposure in ordinary temperature and humidity and the test result should meet the requirements of item8-2.

8、判断特性/Requirements after reliable test

8-1 试验后应满足下列条件

- 输入频率:指标在初始值±30%以内
- 额定电流:指标在初始值±30%以内.
- 噪音：55dBMax

8-2 外观、结构方面无异常发生

8-1After test, following specifications must be satisfied.

-.Input frequency:：within ±30% of initial value.

-.Rated current: within ±30% of initial

-.Noise_T:55dBMax

8-2There should be no abnormalities to happen in structure.

9、使用注意事项/ Points for Attentions

9-1.必须安装规格书标准使用,否则性能与寿命都将受到相当的减少,必须注意电压的使用范畴.

Make sure to use the motor in accordance with the specifications, if not, the lifetime might be reduced accordingly, pay high attention to the range of the voltage.

9-2.建议马达在 6 个月内使用,不要在以下环境中使用及保存.

9-2-1.高温与高湿的场所.

9-2-2.腐蚀性气体,如:H2S,SO2,NO2,CL2;

9-2-3.生锈场所;

The motor is suggested using within 6 months. Do not use or store the motor under below environments:

9-2-1.Hight temperature and high humidity area;

9-2-2.Corrosive gas such as H2S,SO2,NO2,CL2;

9-2-3.Rusty place;

9-3.注意处理马达的工作环境,避免含铁质物体被马达吸住,否则马达将会产生噪音,性能会降低,从而降低产品的可靠性.

Pay attention to the working environment of the motor, avoid any iron material sucked by the motor, or the motor might cause noise and the performance will be degraded, meanwhile, the reliability might be reduced.

9-4.应确信本产品不会违背相关的标准,以及法律法规与行政令.

Make sure the product will not violate any local relevant standards, as well as laws and regulations.

9-5.拿马达时,要轻拿轻放.

Handle with care.

9-6.钢板面边缘有少许锈斑是允许的.

A little rusty spot at the steel plate surface is allowed.

9-7.我司遵循持续发展的策略，在不预先通知的情况下，有对产品（部品）进行修改和改进的权利，当然这些都不会影响马达的特性及使用功能.

Our company follow the sustainable developing strategy, and have the right to make change and improvements to our product without giving notice in advance . of course ,these changes and improvements will not affect the characteristics and function of the motor.

10、环保要求/EnvironmentalProtectionRequirements

本产品所有零部件符合欧盟RoHS指令（2011/65/EU,(EU)2015/863）/无卤/REACH指令要求，具体环境有害物质管控限制如下/

This product conforms to the EU ROHS (2011/65/EU,(EU)2015/863), Halogen-Free and REACH certification, specific contents are as follows:

铅及其化合物最大允许含量为1000ppm/Lead and Lead compounds≤1000ppm

镉及其化合物最大允许含量为100ppm/Cadmium and cadmium compounds≤100ppm

汞及其化合物最大允许含量为1000ppm/Mercury and Mercury compounds≤1000ppm

六价铬化物最大允许含量为1000ppm/Hexavalent chromium compounds≤1000ppm

多溴联苯(PBB)最大允许含量为1000ppm/Polybrominated biphenylethers≤1000ppm

多溴联苯醚(PBDE)最大允许含量为1000ppm/Polybrominated diphenylethers≤1000ppm

领苯二甲酸二异丁酯（DIBP）最大允许含量为1000ppm /DIBP≤1000ppm

邻苯二甲酸二丁酯(DBP)最大允许含量为1000ppm /DBP≤1000ppm

邻苯二甲酸苄基酯(BBP)最大允许含量为1000ppm/BBP≤1000ppm

邻苯二甲酸二（2-乙基己基）酯(DEHP)最大允许含量为1000ppm/DEHP≤1000ppm

六溴环十二烷(HBCDD)最大允许含量为1000ppm/HBCDD≤1000ppm

溴Br最大允许含量为900ppm/Br≤900ppm

氯Cl最大允许含量为900ppm/Cl≤900ppm

溴加氯之和最大允许含量为1500ppm/Br+Cl≤1500ppm

REACH 指令按最新法规内容管控执行/The instructions are subject to the latest regulations

包装材料环保管控要求/Environmental control requirements for packaging materials：

Pb+Cd+Hg+Cr6 < 100ppm (Cd<50ppm)

11、包装/Packing

线性系列马达包装
Pack drawing of coin type

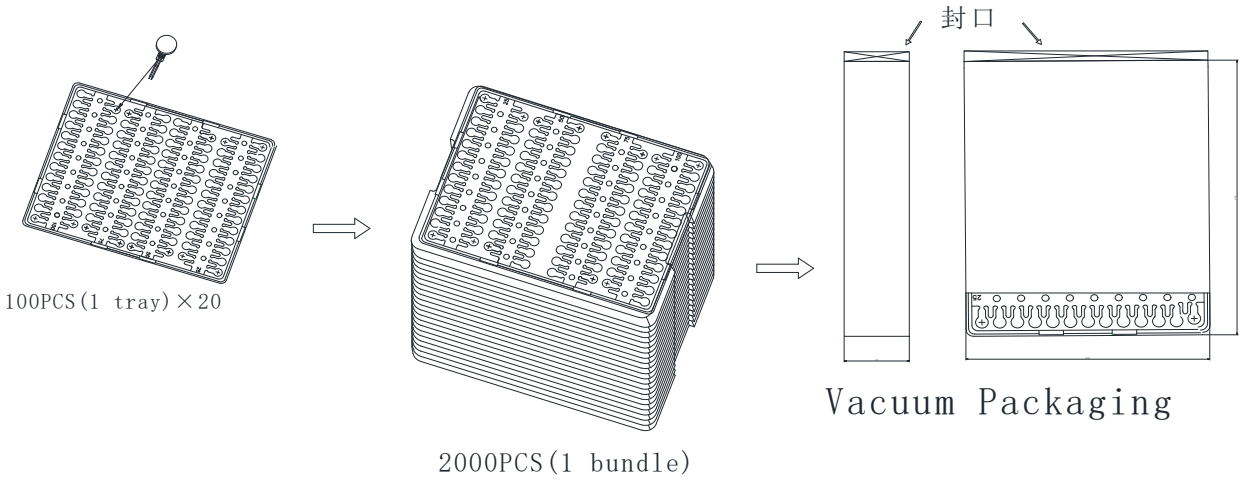

1 box×2

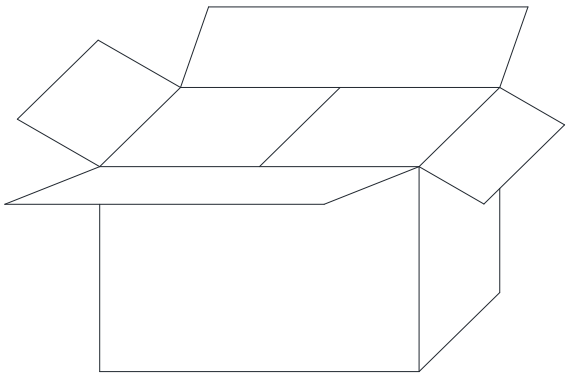

Remarks:
4000PCS/CTN:46cm×28.5cm×16cm
8000PCS/CTN:46cm×28.5cm×30.5cm

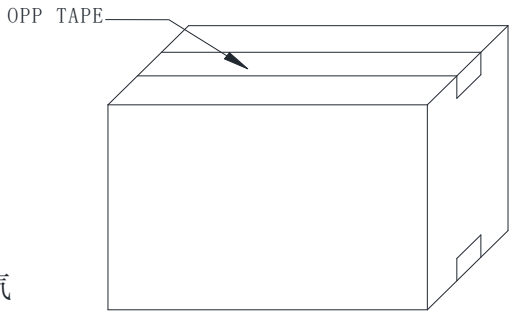

包装试验要求:
沿外包装箱±x,±y和±z方向,距水泥地面1.5m高度,各自由跌落2次,马达应无机械损伤,电气性能仍符合标准要求。

立得微电子（惠州）有限公司
技术开发部

12.马达外形图/Motor outline drawin

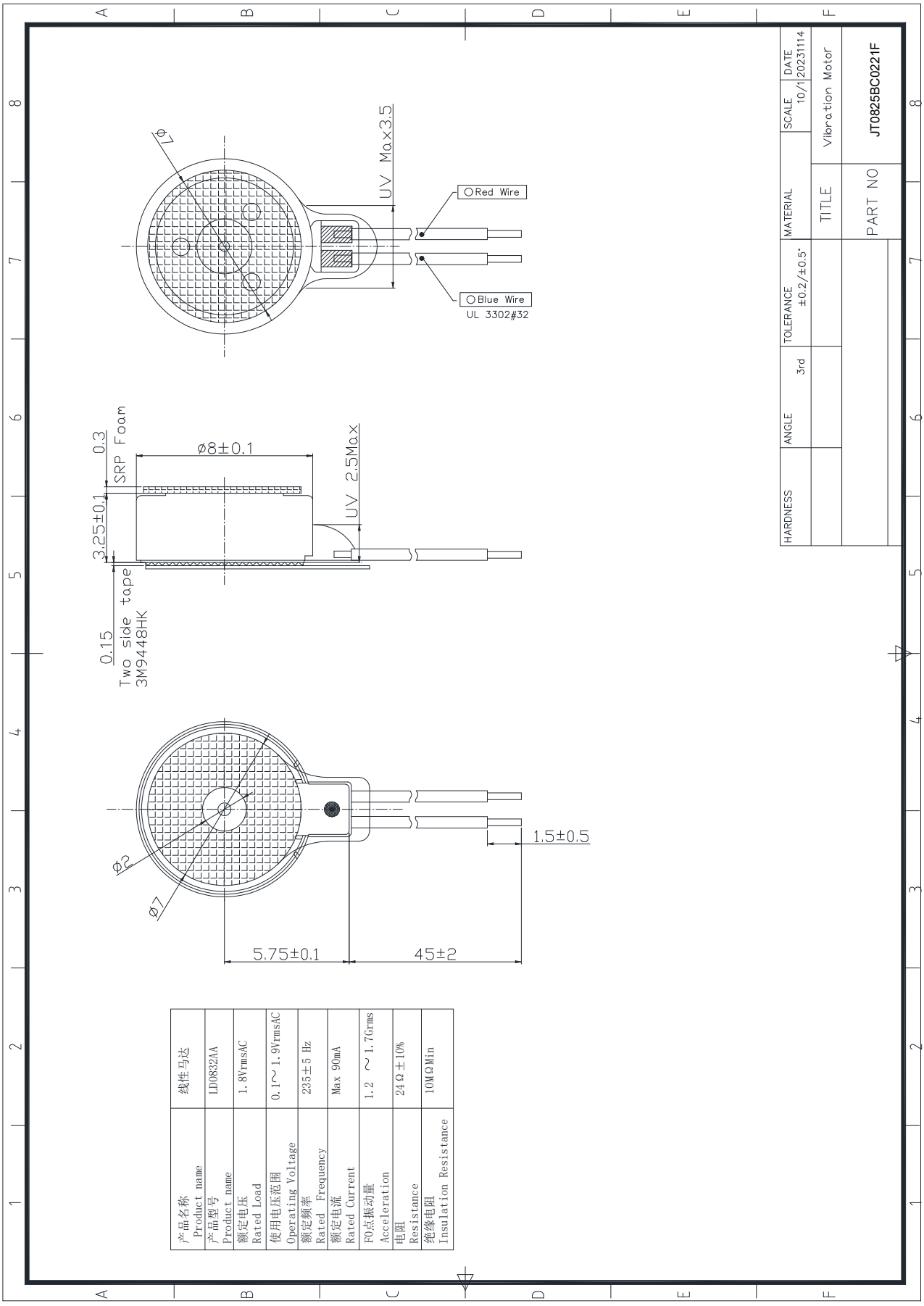

产品名称 Product name	线性马达
产品型号 Product name	LD0832AA
额定电压 Rated Load	1.8VrmsAC
使用电压范围 Operating Voltage	0.1～1.9VrmsAC
额定频率 Rated Frequency	235±5 Hz
额定电流 Rated Current	Max 90mA
F0点振动量 Acceleration	1.2 ～1.7Grms
电阻 Resistance	24Ω±10%
绝缘电阻 Insulation Resistance	10MΩMin