Jetta Motor

版本号：A0

产品规格书

PRODUCT SPECIFICATION

FILLED BY JETTA	文件编号 Spec No.	JETTA-000
	品名 Part Name	Z向线性马达 Z axis linear vibration motor
	型号 Model No.	JTM0312-FP203-U
	批准 Approval	JETTA

FILLED BY BUYER	客户名称 Buyer Name	
	客户料号 Buyer Part No.	
	客户承认签章 Buyer Approved Signatures	

- 目录/List -

封面/Cover 1/12

目录/Contents 2/12

更改记录/Revision History 3/12

1.适用范围/Scope of Application 4/12

2.使用条件/Standard Operating Condition 4/12

3.测试条件/Testing Condition 5/12

4.特 性/Electrical Characteristics 5/12-6/12

5.可靠性试验/Reliability Test 7/12

判定标准/ Judgement Standard 8/12

6.使用注意事项/Caution 9/12

7.环保要求/Environmental Protection Requirements 10/12

8.马达外形图/Motor Outside View 11/12

9.包装/Packaging 12/12

更改记录/ Revision History

版本 Version	更改详情 Detail Spec Changes	日期 Date
A0	初始规格/Preliminary spec	2021-09-09

1.适用范围/Scope of Application

本规格书适用于公司制造的应用于移动电话的振动马达。

This specification is applied for vibration motor, which is manufactured by JETTA. for mobile phones.

型号名称标准/Standard of model name:

JTM0312

- 尺寸规格/SIZE SPEC ： 宽度/ Width ： 3mm, 长度/ Length：12mm
- JT振线性振动马达/JT Linear Vibration Motor

2.使用条件/Standard Operating Condition

NO.	项目/Item	规格/Specifications
2-1	额定电压 Rated voltage	1.8Vrms AC, Sine wave
2-2	使用电压范围 Operating voltage range	0.1～1.85Vrms AC
2-3	振动方向 Direction of vibration	Z axis
2-4	额定工作频率 Rated operating frequency	240Hz
2-5	使用温度范围 Operating temperature range	-20℃~+60℃,Ordinary Humidity:65±20%RH
2-6	保存环境范围 Storage temperature range	-30℃~+70℃,Ordinary Humidity:65±20%RH

3.测试条件/ Testing Condition

NO.	项目/Item	规格/Specifications
3-1	温度 Temperature	25℃±3
3-2	湿度 Humidity	45% ~85%RH
3-3	电源电压 Power Supply, Voltage Source	1.8±0.05Vrms AC, Sine wave
3-4	工作频率 Operational Frequency	240 ±10Hz

4.特性/Electrical Characteristic

NO.	项目/Item	规格/SPEC.	条件/Condition
4-1	额定电流/ Rated Current	MAX.100mArms	标准测试条件 Standard testing condition
4-2	F0 点的振动量/ Acceleration at F0	1.0Grms Min	标准测试条件，100g 治具 Standard testing condition, 100g Jig
4-3	阻抗/ Resistance	20±10%Ω	标准测试条件 Standard testing condition
4-4	频率特性/ Frequency characteristics	240 ±10 HZ	标准测试条件 Standard testing condition
4-5	上升时间/ Rising Time	Max 50msec	标准测试条件,0~50%正常加速度 Standard testing condition 0-50% normal acceleration
4-6	下降时间/ Falling Time	Max 50msec	标准测试条件,100%~50%正常加速度 Standard testing condition 100%-50% normal acceleration
4-7	重量/ Weight	1.0±0.1 gram	标准测试条件 Standard testing condition
4-8	马达声音/ Mechanical Noise	Max.45dB(A) Refer To Figure 1 (参考图形 1)	距离麦克风 10cm,标准测试条件 10cm away from the microphone, Standard testing condition

4-9	绝缘电阻/ Insulation resistance	Min.10 MΩ	100V DC 输入，在马达壳体和 PCB 之间测量 100V DC input, measure at the location between motor case and PCB

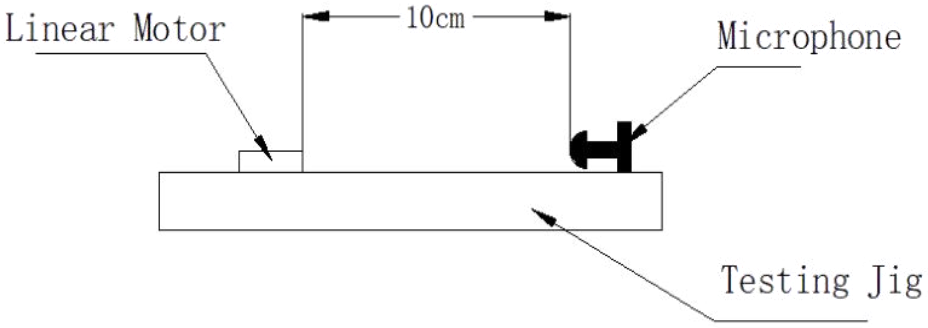

1. 马达被固定 / Motor:be fixed
2. 背景噪音：28dB MAX.
   Back ground noise:28dB MAX.
3. 拾音器沿轴向正对电机平面
   Microphone faces the plane of motor along the shaft

Figure 1：Noise measurement condition

5.可靠性试验/Reliability Test

NO	项目/Item	条件/Condition
5-1	低温贮存试验 Low temperature storage test	在-30℃的环境下放置168小时，然后在常温常湿下恢复4小时后测试。 Exposed at -30℃ for 168hours, then return to normal temperature and humidity for 4 hours before test.
5-2	高温贮存试验 High temperature storage test	在+70℃的环境下放置168小时，然后在常温常湿下恢复4小时后测试。 Exposed at +70℃ for 168hours, then return to normal temperature and humidity for 4 hours before test.
5-3	高湿贮存试验 High humidity storage test	在+55℃,95%RH的环境下放置120小时，然后在常温常湿下恢复4h后测试。 Exposed at +55℃ 95%RH for 120hours, then return to normal temperature and humidity for 4 hours before test.
5-4	温冲试验 Thermal shock test	马达按照以下试验条件放置 15 个周期，然后在常温常湿下放置 4 小时后测试。 Place the motor for 15 cycles according to the following test condition, and then tested at room temperature and humidity for 4 hours. 试验条件/Test condition: 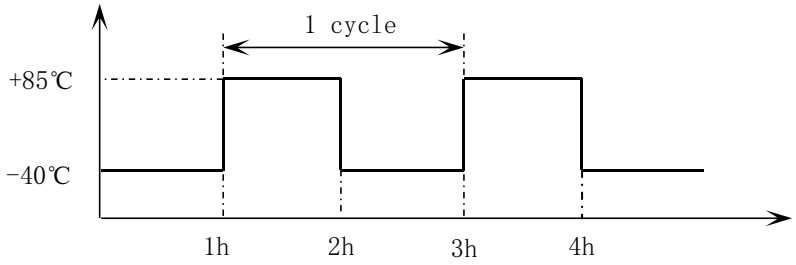 高低温转换时间：≤5分钟 Transfer time between high temperature and low temperature:≤5min
5-5	跌落 Drop test	将马达固定在150g的塑料夹具上，从1.5米的高度跌落到水泥地面上，六个面的每个面都跌落3次。 Fix the motor on a 150g jig (plastic housing) and drop it onto the concrete floor from 1.5m height. Each surface drops three times (3 x 6), total 18 drops.

5-6	振动试验 Vibration test	将马达固定在150g的塑料夹具上，按以下要求进行试验： 1)扫频范围:10-55Hz 2)全振幅:1.5mm 3)扫频变化：10-55-10 约10分钟 4)振动方向:三个垂直方向 5)持续时间:每个方向10分钟（共30分钟） Fix the motor on a 150g jig (plastic housing) and test according to following condition: 1)Vibration frequency range: 10~55Hz 2)Total amplitude: 1.5mm 3)Sweep ratio: 10~55~10Hz approximate 10min 4)Direction of vibration: Three perpendicular directions 5)Duration: 10min (30min in total)
5-7	寿命试验 Life test	1.试验循环/Test cycle:300,000 cycle (cycle:1sec on/2sec off) 2.测试设备/Test equipment:寿命试验机/ Life time test machine 3.输入电压（1.8VrmsAC,Sine wave）,输入频率：240Hz Input voltage(1.8VrmsAC,Sine wave), Input frequency 240Hz

► 判定标准/Judgment standard

试验后，测试数据必须符合以下规格：

1.加速度、电阻、电流变化率：不得超过初始值的±30%

2.噪音：50dB Max

3.外形，结构方面无异常发生

After the test, the test result must meet the following specifications:

1.The fluctuation of Acceleration, Resistance, Rated Current: initial Value±30%

2.Noise:50dB Max

3.No abnormalities occurred in the structure.

6.注意事项/Caution

(1)该马达是微型精密产品，在运输过程或使用时不要承受超过0.5 kgf的力，否则会引起外形或性能的变化.

As this motor is small and precise, do not press it over 0.5kgf force or while transportation or operation, it can cause the transformation of performance or external appearance.

(2) 请注意马达不要浸入到液体性物质中（比如：水，酒精等）

Please be careful not to immerse the motor in any liquid substance (such as: water, alcohol etc.)

(3) 不要将马达长时间放置在高温或高湿下，否则有可能导致电机的性能下降。

Do not expose the motor to high temperature or high humidity for long time, it may cause a decline in performance.

(4) 马达不要靠近腐蚀性气体如H_2S、SO_2、NO_2等,否则会引起腐蚀。

Do not use the motor near corrosive gases(such as:H2S, SO2, NO2, etc.),otherwise it will cause corrosion.

(5) 请不要在靠近磁铁或带有磁场的仪器旁边使用或存放马达，否则有可能导致电机的性能下降。

Please do not operate or store the motor adjacent to magnet or apparatus that has a magnetic field, it may cause a decline in performance.

(6)为优化振动量,额定电压和频率可根据客户装配条件进行更改。

To optimize the vibration force, rated voltage and frequency could be changed as to customer’s assembly condition.

(7) 如有任何问题，工厂和客户双方应共同努力解决。

If any problems occur, both the user and Factory shall try to solve the problem together.

(8)马达符合有关环境的法律和法规的要求（如ROHS2.0、REACH、H/F等）

The motor complies with relevant environmental laws and regulations (such as: ROHS2.0, REACH, H/F etc.)

7.环保要求/Environmental Protection Requirements

本产品所有零部件符合欧盟RoHS指令（2011/65/EU,(EU)2015/863）/无卤/REACH指令要求，具体环境有害物质管控限制如下/

This product conforms to the EU ROHS (2011/65/EU,(EU)2015/863), Halogen-Free and REACH certification, specific contents are as follows:

铅及其化合物最大允许含量为1000ppm/Lead and Lead compounds≤1000ppm

镉及其化合物最大允许含量为100ppm/Cadmium and cadmium compounds≤100ppm

汞及其化合物最大允许含量为1000ppm/Mercury and Mercury compounds≤1000ppm

六价铬化物最大允许含量为1000ppm/Hexavalent chromium compounds≤1000ppm

多溴联苯(PBB)最大允许含量为1000ppm/Polybrominated biphenylethers≤1000ppm

多溴联苯醚(PBDE)最大允许含量为1000ppm/Polybrominated diphenylethers≤1000ppm

领苯二甲酸二异丁酯（DIBP）最大允许含量为1000ppm /DIBP≤1000ppm

邻苯二甲酸二丁酯(DBP)最大允许含量为1000ppm /DBP≤1000ppm

邻苯二甲酸苄基酯(BBP)最大允许含量为1000ppm/BBP≤1000ppm

邻苯二甲酸二（2-乙基己基）酯(DEHP)最大允许含量为1000ppm/DEHP≤1000ppm

六溴环十二烷(HBCDD)最大允许含量为1000ppm/HBCDD≤1000ppm

溴Br最大允许含量为900ppm/Br≤900ppm

氯Cl最大允许含量为900ppm/Cl≤900ppm

溴加氯之和最大允许含量为1500ppm/Br+Cl≤1500ppm

REACH 指令按最新法规内容管控执行/The instructions are subject to the latest regulations

包装材料环保管控要求/Environmental control requirements for packaging materials：

Pb+Cd+Hg+Cr6 < 100ppm (Cd<50ppm)

8.马达外形图/Motor Outside View

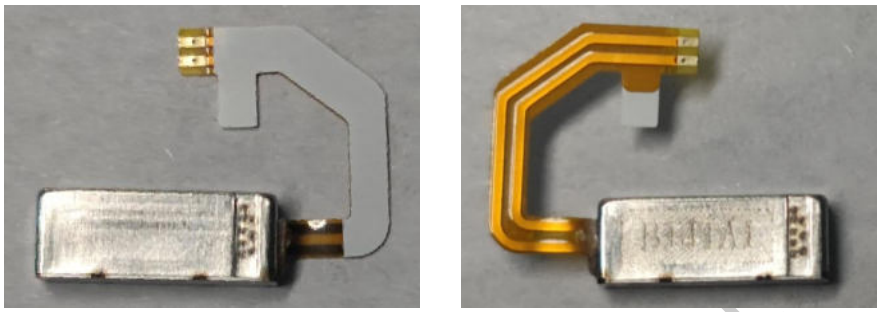

下机壳底部追加网格镭雕和外接焊盘镀金

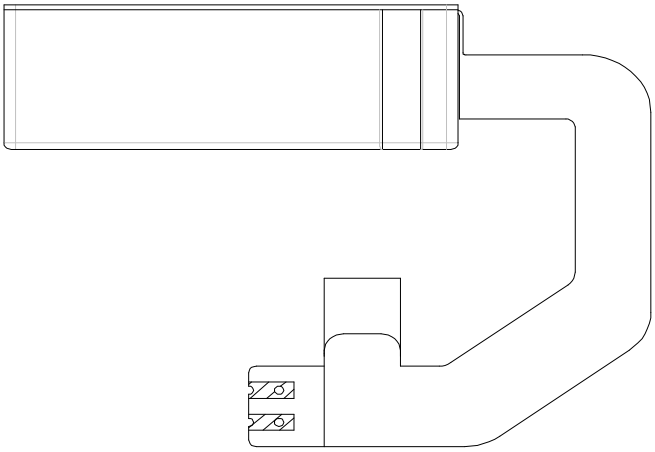

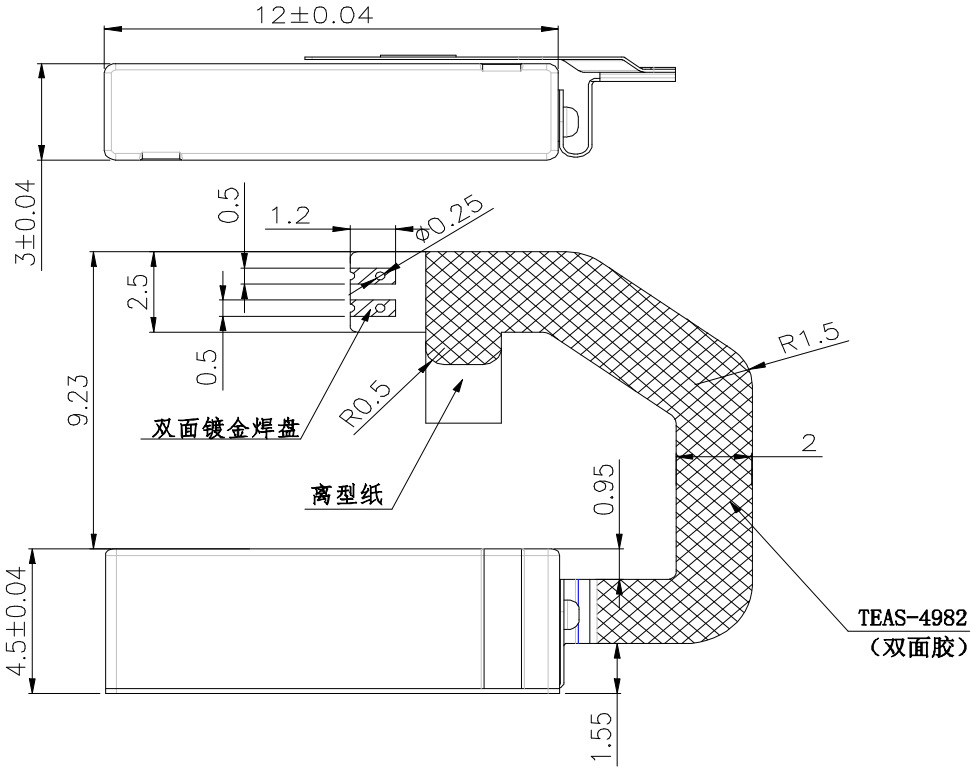

9.包装/Packaging

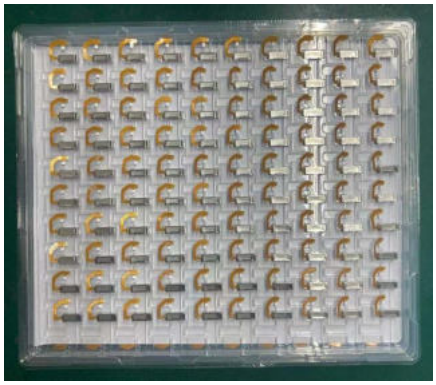

吸塑盒尺寸(长:250mm 宽:210m 高:11mm)
Tray dimension (L:250mm W:210mm H:11mm)

每个吸塑盒放 100 只
100pcs per tray



内箱尺寸(长:260mm 宽:215mm 高:80mm)
Inner-box dimension (L:260mm W:215mm H:80mm)

每 10 个吸塑盒捆在一起,数量为 1000 只,装入内箱
Pack every 10 trays together with total 1000pcs motors, and put the bundle into an inner box.



外箱尺寸(长：450mm 宽:280mm 高:180mm)
Master carton dimension:
(L:450mm W:280mm H:180mm)

4 个内箱装入外箱，数量共 4000 只;
Put 4 inner-boxes into an master carton, with total 4000pcs/ctn.