Jetta Motor

版本号：A0

产品规格书

PRODUCT SPECIFICATION

FILLED BY JETTA	文件编号 Spec No.	JETTA-001
	品名 Part Name	扁平振动马达 Coin Vibration Motor
	型号 Model No.	JTC0720A3422F
	批准 Approval	JETTA

FILLED BY BUYER	客户名称 Buyer Name	
	客户料号 Buyer Part No.	
	客户承认签章 Buyer Approved Signatures	

- 目录/List -

1. 适用范围/ Applicable Scope 3/12
2. 使用条件/ Operating Conditions 3/12
3. 测试条件/ Test Conditions 3/12
4. 初期电气性能/ Initial Electrical Characteristics 3/12
5. 机械性能/ Mechanical Characteristics 4/12
6. 耐久性能/ Reliability Characteristics 4/12
7. 标准测量方法/ Standard Measuring Method 7/12
8. 测量方法及回路图/ Measuring Method & Circuit Map 7/12
9. 使用注意事项/ Cautions in Use 8/12
10. 特性曲线图/ Characteristics Graph 8/12
11. 环境管理物质/ Environmental Management Materials: 9/12
12. 包装/ Packaging 10/12
13. 外形图/ Mechanical Drawing 11/12
14. 更改记录/ Revision Records 12/12

1. 适用范围/ Applicable Scope

本说明书适用于扁平式永磁直流电机C0720A系列.
This specification applies to Coin Motor DC model C0720A series.

2. 使用条件/ Operating Conditions

项目/Item		规格/Specification
2-1	额定电压 Rated voltage	3.0V DC
2-2	使用电压范围 Operating voltage	2.7~3.3V DC
2-3	旋转方向 Rotation	CW(clockwise) or CCW(counter clockwise)
2-4	使用环境 Operating environment	-20~+60℃, 65±20%RH
2-5	保存环境 Storage environment	-40~+80℃, 65±20%RH

3. 测定条件/ Testing Conditions

项目/Item		规格/Specification
3-1	温度 Temperature	25±3℃
3-2	湿度 Humidity	65±2% RH
3-3	气压 Air Pressure	1013±40 hPa
3-4	电源 Power	稳压直流电流 Constant DC Current

4. 初期电气性能/ Initial Electrical Characteristics

项目/Item		规格/Specification	条件/Condition
4-1	额定转速 Rated Speed	9000 rpm Min	额定电压下和额定负载下。 At rated voltage and rated load.
4-2	额定电流 Rated Current	≤85mA	
4-3	起动电流 Starting Current	≤120mA	在最小起动电压下起动 Motor is rotating at min starting voltage.
4-4	起动电压 Starting Voltage	≤2.5V DC	
4-5	绝缘电阻 Insulation Resistance	≥10MΩ	在100V直流下，导线和机壳间测量 At DC 100V between lead wire and case.
4-6	端子阻抗 Terminal Resistance	35Ω±15% (单相) 70Ω±15%(串联)	在25℃下 At25℃

5. 机械性能/ Mechanical Characteristics

项目/Item		规格/Specification
5-1	底盖偏转强度 Bracket deflection strength	9.8N以上 ≥9.8N
5-2	机械噪音 Mechanical noise	小于50分贝. A计权 ≤50dB (A)
	在额定电压下。 背景噪音：不大于28dB.A计权 电机轴向水平固定在约100g测试夹具上, 拾音器沿轴向正对电机平面. 测试距离100mm At rated voltage and scene noise as 28dB (A)Max, the shaft is horizontally fastened to the test jig (100g). The Microphone faces the plane of motor along The shaft . The distance is 100mm.	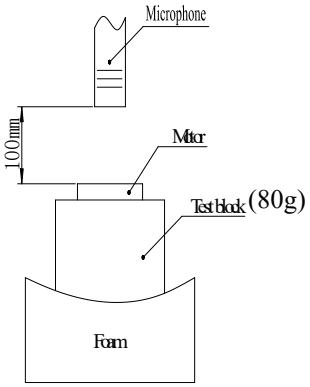
5-3	Vibration Test 振动测定	0.8G (AVG) 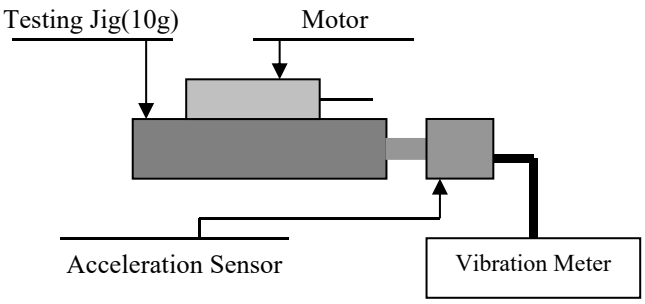

6. 耐久性能/ Reliability Characteristics

项目/Item		规格/Specification	判定标准/Judgment
6-1	寿命 Life	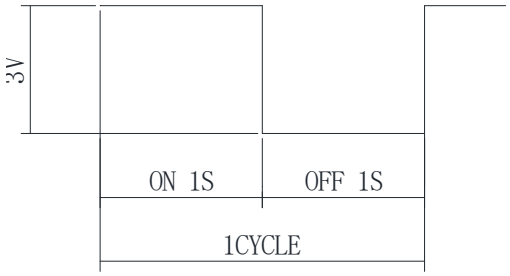 试验循环 /Test cycle：50,000 cycles	在常温常湿下放置4h后，电机性能应符合以下要求。 1)额定转速:指标不低于初始值-30%；不高于初始值+50% 2)额定电流:指标在初始值±30%以内。 3)起动电压:2.5V DC Max直流电压. After 4h exposure in the ordinary temperature and humidity,the motor's performance shoud accord with below requirements: 1)Rated speed:Data-30% Initial Min, Data+50% Initial Max. 2)Rated current:Data±30% Max. 3)Starting voltage: 2.5V DC Max

项目/Item		规格/Specification	判定标准/Judgment
6-2	低温放置 Low Temperature Exposure	温度 /Temperature: –40±2℃ 时间 /Time: 96h	在常温常湿下放置4h后，电机性能应符合以下要求。 1)额定转速:指标在初始值±30%以内。 2)额定电流:指标在初始值±30%以内。 3)起动电压:2.5V DC Max. After 4h exposure in the ordinary temperature and humidity, change rates of the motor's performance should accord with below requirements: 1)Rated speed: within ±30% of initial value. 2)Rated current: within ±30% of initial value. 3)Starting voltage: 2.5V DC Max
6-3	高温放置 High Temperature Exposure	温度 /Temperature: + 80±2℃ 时间 /Time: 96h	
6-4	湿度放置 Humidity Exposure	温度 /Temperature : + 60±2℃ 湿度 /Humidity: 90 ~ 95%RH 放置时间 / Exposure time : 96h 无水气凝结 /No condensation of moisture	
6-5	振动 Vibration	频率 /Frequency: 10~55Hz 加速度 /Acceleration: 22m/s2 周期 /Period: 10 Minutes log sweep (1.0G), (10~55~10Hz) 条件 /Condition: This motion shall be applied for a period of 10 minutes in direction of X, Y, Z.	在常温常湿下放置4h后，电机性能应符合以下要求。 1)额定转速:指标在初始值±30%以内。 2)额定电流:指标在初始值±30%以内。 3)起动电压:2.5V DC Max. After 4h exposure in the ordinary temperature and humidity, change rates of the motor's performance should accord with below requirements: 1)Rated speed: within ±30% of initial value. 2)Rated current: within ±30% of initial value. 3)Starting voltage: 2.5V DC Max
6-6	自然跌落 Free fall	试验状态: 将马达固定在约50克(包括马达本身)的物体上，落向水泥地面。 Test state: Set the motor to a block of an approx. 100g weight (including the motor) and drop it onto the concrete floor. Height: 1.2m Direction :±x, ±y, ±z Number of times: 3 times each direction Shock: 29420m/s² equivalent to 3000G.	在常温常湿下放置4h后，电机性能应符合以下要求。 1)额定转速:指标在初始值±30%以内。 2)额定电流:指标在初始值±30%以内。 3)起动电压:2.5V DC Max. After 4h exposure in the ordinary temperature and humidity, change rates of the motor's performance should accord with below requirements: 1)Rated speed: within ±30% of initial value. 2)Rated current: within ±30% of initial value. 3)Starting voltage: 2.5V DC Max

项目/Item		规格/Specification	判定基准 / Requirements
6-7	滚筒试验 Barrel roll test	滚筒高度: 1.0M 滚筒次数: 300次. 滚筒速率: 13±1次/分钟 Height: 1.0M Times: 300 times. Speed: 13±1 times/Minute	在常温常湿下放置4h后，电机性能应符合以下要求。 1)额定转速:指标在初始值±30%以内。 2)额定电流:指标在初始值±30%以内。 3)起动电压:2.5V DC Max. After 4h exposure in the ordinary temperature and humidity, change rates of the motor's performance should accord with below requirements: 1)Rated speed: within ±30% of initial value. 2)Rated current: within ±30% of initial value. 3)Starting voltage: 2.5V DC Max
6-8	热冲击 Heat stock test	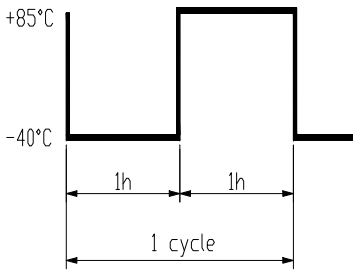 试验循环 /Test cycle: 15 cycles	在常温常湿下放置4h后，电机性能应符合以下要求。 1)额定转速:指标在初始值±30%以内。 2)额定电流:指标在初始值±30%以内。 3)起动电压:2.5V DC Max. After 4h exposure in the ordinary temperature and humidity, change rates of the motor's performance should accord with below requirements: 1)Rated speed: within ±30% of initial value. 2)Rated current: within ±30% of initial value. 3)Starting voltage: 2.5V DC Max

7. 标准测量方法/ Standard Measuring Method

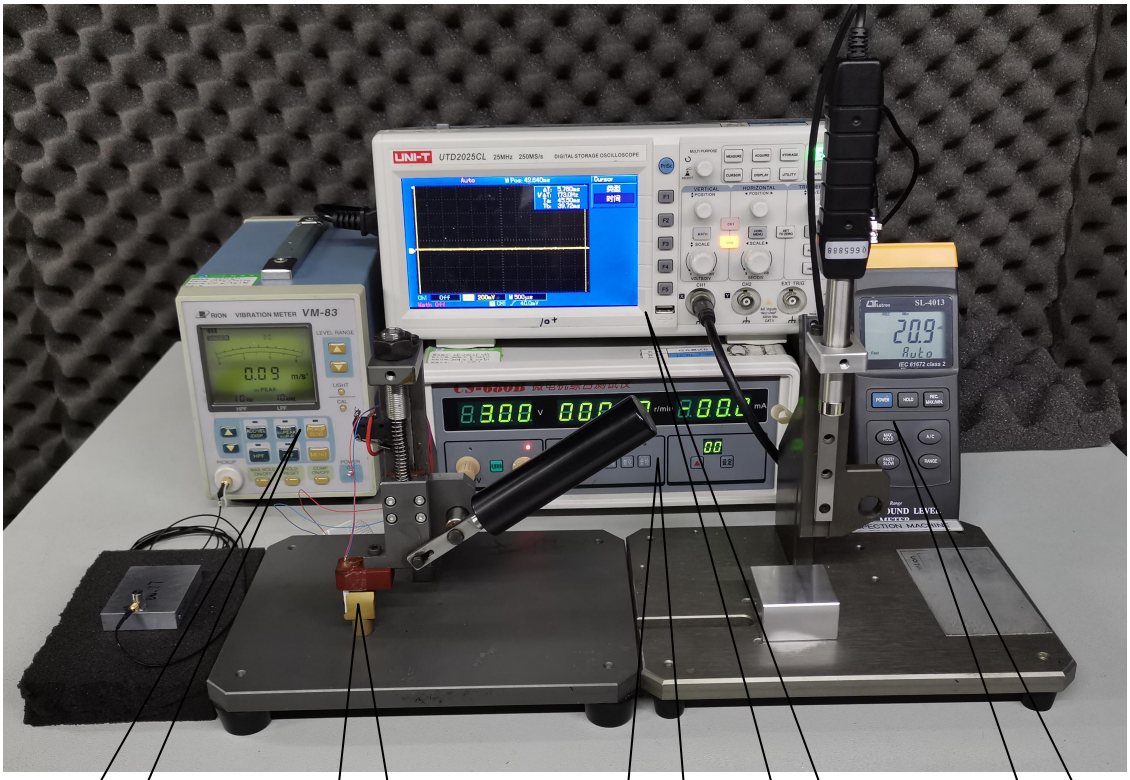

8. 测量方法及回路图/ Measuring Method & Circuit Map

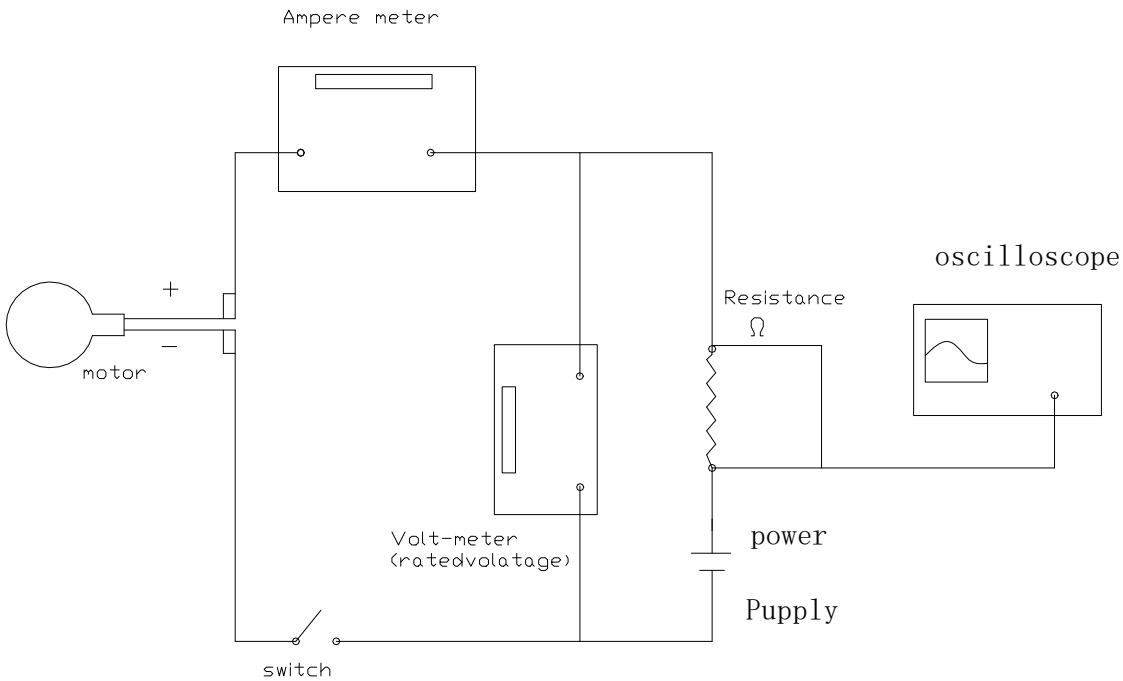

9. 使用时注意事项/ Caution in Use

9-1 必须按照规格书标准使用,否则性能和寿命都将受到相当地减少，必须注意电压的使用范围. / The performance and lifetime would be considerably reduced if the operation is not done as per the specification defines. Do pay attention to the range of operating voltage in use.

9-2 建议马达在六个月内使用,不要在以下环境中使用及保存：
- 高温和高湿的场所；
- 腐蚀性气体,如：H_2S、SO_2、NO_2、Cl_2；
- 生锈场所。

It is suggested to use the motors within 6 months as possible as you can.
It is not suggested to use or store the motors under the following conditions:
- High temperature and high humidity area.
- Corrosive gas environment, such as H_2S, SO_2, NO_2, Cl_2 etc.
- Dusty areas.

9-3 注意处理马达的工作环境，避免含铁质物体被马达吸住，否则马达将会产生噪声，性能会降低，从而减少产品可靠性。/ Keep clean the working environments to avoid the objects such as iron powder etc are attracted by the magnet. Otherwise, it would cause noise, function deterioration and lower reliability.

9-4 应确信本产品不会与相关标准、法律、政令相背。/ Be sure not to disobey the local laws and rules.

9-5 拿马达时，要轻拿轻放。/ The motors should be taken up and placed gently in operation.

9-6 钢板面或边缘有少许锈斑是允许的。/ Slight rust on the edge of the steel housing is permitted.

10.特性曲线图/Characteristics Graph

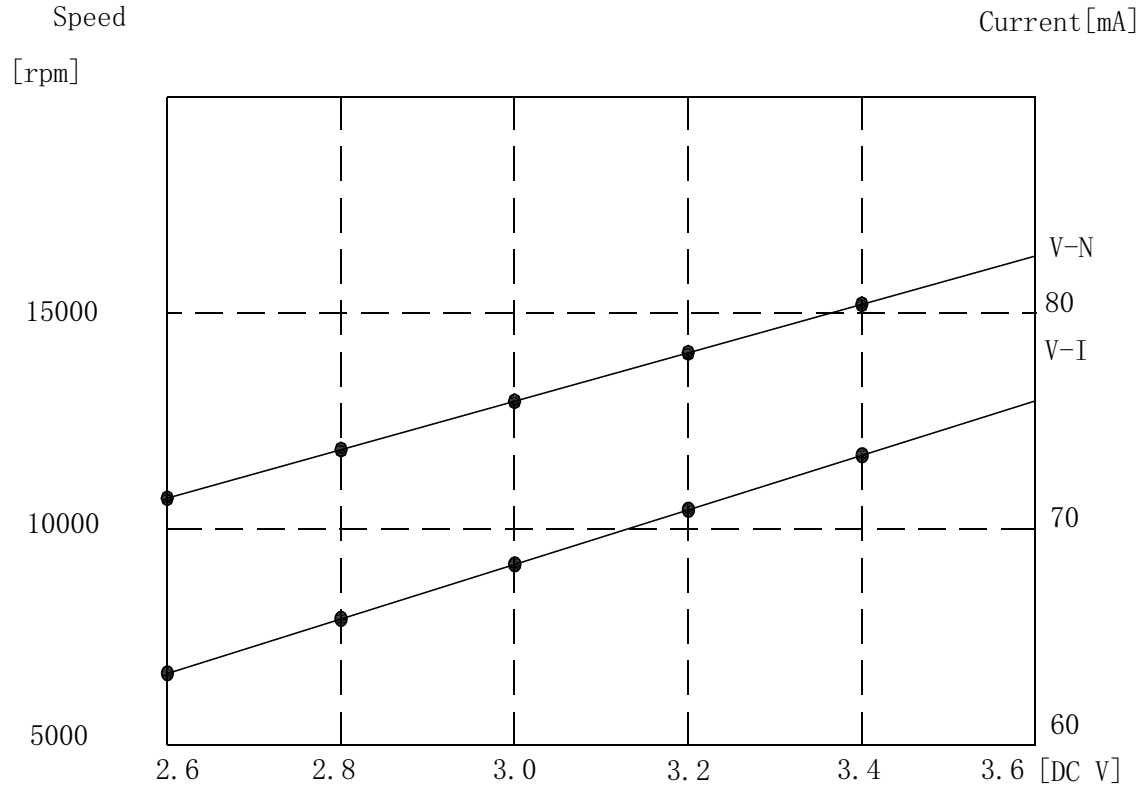

11. 环境管理物质/ Environmental Management Materials:

11.1 本产品应符合RoHS 指令要求和无卤素要求。
The product should be in compliance with RoHS/ REACH requirements:

＊镉及其化合物最大允许含量为100PPM
Cadmium and Compound: ≤100PPM
＊ 铅及其化合物最大允许含量为1000PPM
Lead and Compound: ≤ 1000PPM
＊汞及其化合物最大允许含量为1000PPM
Hydrargyrum and Compound: ≤ 1000PPM
＊ 六价铬及其化合物最大允许含量为1000PPM
+6 Chromium and Compound: ≤ 1000PPM
＊ 多溴联苯及其化合物最大允许含量为1000PPM
PBB and Compound: ≤ 1000PPM
＊ 多溴二苯醚及其化合物最大允许含量为1000PPM
PBDE and Compound: ≤ 1000PPM
＊ 氯溴两种卤素之和最大允许含量为1500PPM
The allowed content of Cl and Br is 1500PPM Max for total.
＊ 氯卤素最大允许含量为900PPM
The allowed content of Cl is 900PPM Max.
＊溴卤素最大允许含量为900PPM
The allowed content of Br is 900PPM Max.

12. 包装/ Packaging：

振动马达包装

Pack drawing of Vibrator Motor

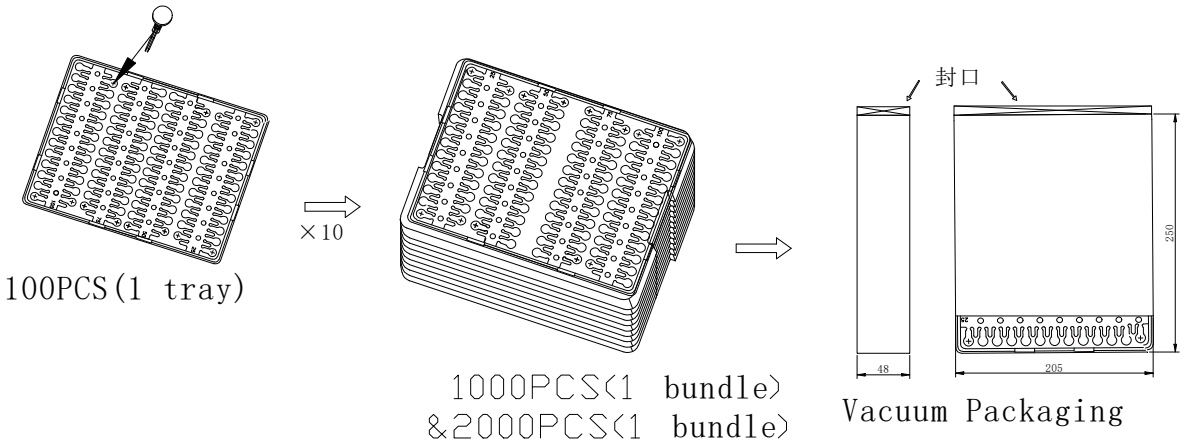

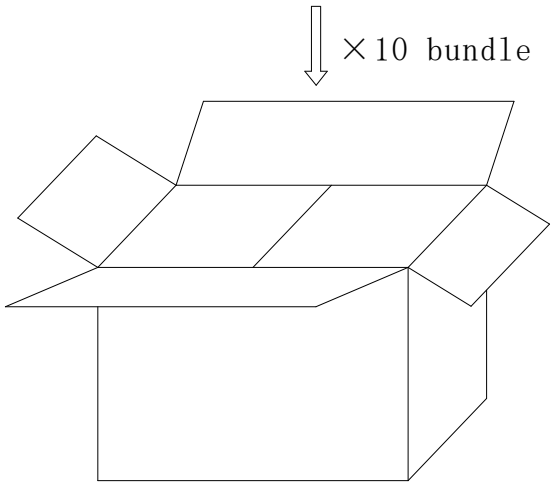

10000PCS/ CARTON

包装尺寸/Packaging Size:

10000PCS/CARTON:
CARTON SIZE:430mm*270mm*220mm

包装试验要求:

Packaging test requirements:
沿外包装箱±x,±y和±z方向,距水泥地面1.5m高度,各自由跌落2次,马达应无机械损伤,电气性能仍符合标准要求。
Along the outer packing box + X, + y and + Z direction, from the cement ground 1.5m height, the free fall 2 times, the motor should have no mechanical damage, electrical performance is still in line with the standard requirements.

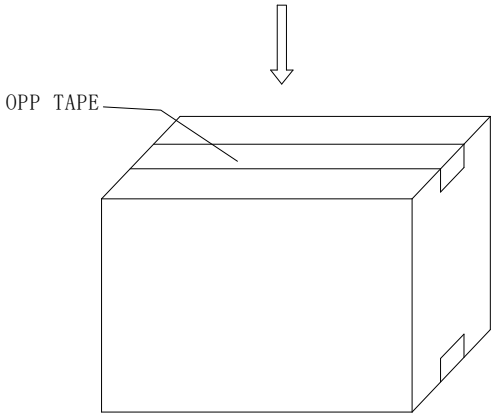

13. 外形图/ Mechanical Drawing：

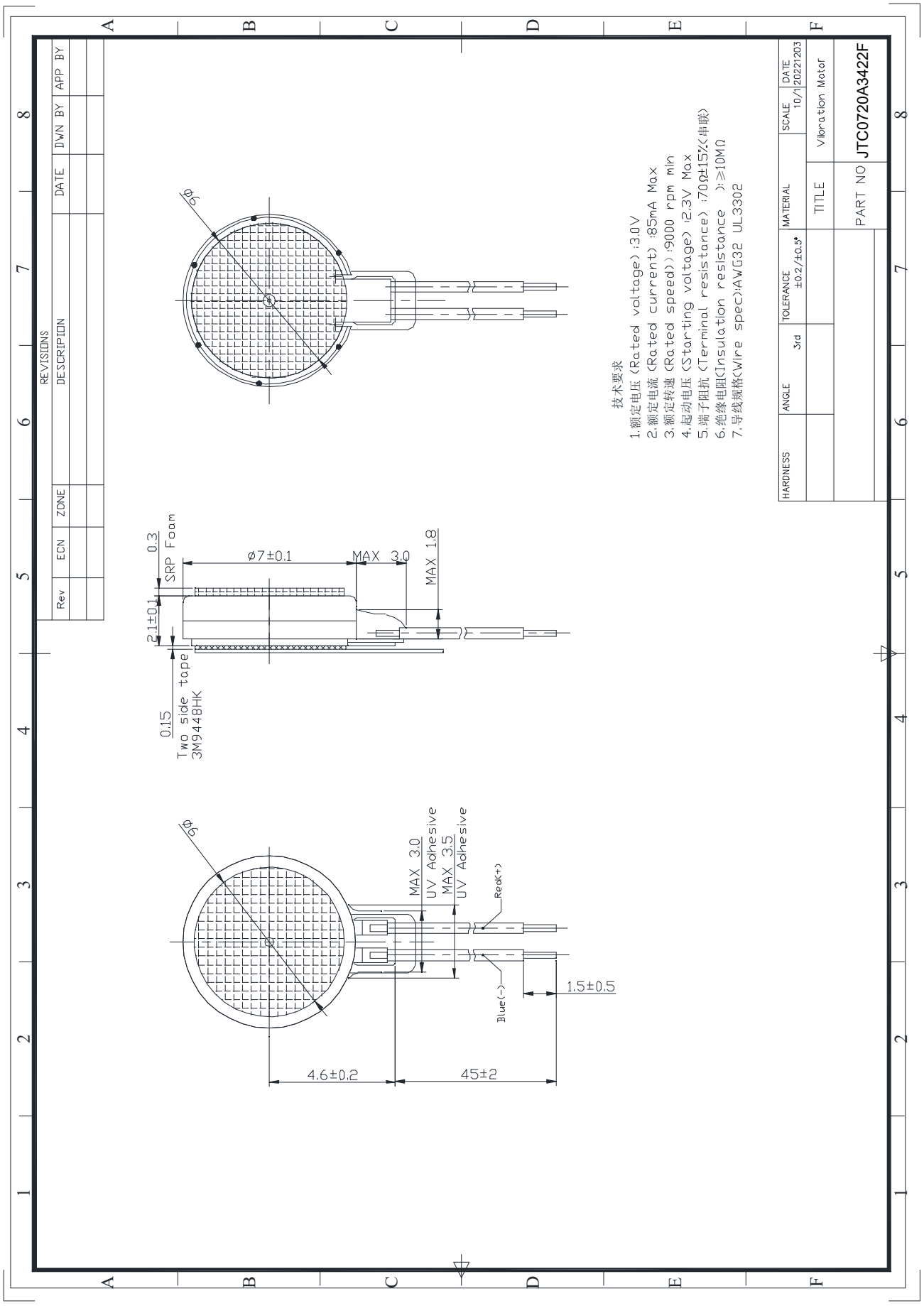

14. 更改记录/ Revision Records：

REVISION RECORDS
修改记录表

REV NO 修改号	DATE 日期	PAGE 页码	REVISION ITEM 修改项目	REASON 更改原因
REV,0	2022.12.03	/	产品发布	