胜利门
BROADUP

HIGH SPEED COLD STORAGE DOOR

T201



ENGINEERED
FOR EXCELLENCE
BUILT TO PERFORM.

High Speed
High Reliability
Enhanced Safety
Built to Last

PRODUCT DETAILS

ENGINEERED
FOR COLD STORAGE.
BUILT TO PERFORM.

Every component is precisely designed to ensure reliable operation,outstanding sealing.superior insulation and long-lasting durability inlow-temperatureenvironments.



01

Two-Way Automatic Reset Function

Automatic self-reinsertion
At Broadup we used the crash-forgiving, self-reinserting door. Its curtain automatically reinserts when dislodged,without intervention.This means: no repair costs, nor costly productiondowntime.



02

Cold-resistant Anti-Icing Design for Door Frame

Broadup side rails have heating cables to prevent frost damage and prolong life (control box heating optional). Warm side air curtain reduces air exchange, controlling condensation and frost.

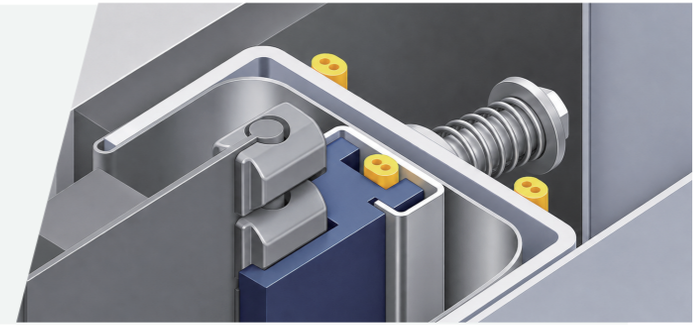

03

Flexible Anti-Collision Door Curtain

The curtain material is soft and features cushioning properties. In the event of contact with personnel or goods during operation, it effectively prevents injury and damage, meeting high standards of operational safety requirements.



04

Independent Zipper Element Design for Easy Replacement

he zipper system features independent elements. A single damaged element can be replaced individually without replacing the entire zipper, greatly reducing maintenance costs and downtime.



USAGE SCENARIOS

ENGINEERED FOR PERFORMANCE.

BUILT FOR EVERY COLD STORAGE NEED.

01

High-Frequency Cold Chain Logistics Center

In frozen food/fresh distribution centers, goods frequently move between -25°C blast freezers and 0–5°C sorting areas. T201 offers 2.0m/s fast opening/closing, heated frame to prevent icing, two way auto reset against impacts; independent zipper elements can be replaced in seconds – greatly reducing maintenance and downtime costs.



02

Pharmaceutical Cold Chain Warehousing and GSP-Compliant Cold Storage

Pharmaceutical cold storage (vaccines, etc.) requires stable -20°C to +5°C and GSP compliance. T201's 13mm insulated curtain ensures reliable temperature retention; anti icing frame eliminates ice jams; flexible anti collision curtain + infrared photocell provide dual protection. Compact design, ideal for space limited cold room retrofits.



03

Supermarket Back-of-House and Central Kitchen Low-Temperature Buffer Zones

In supermarket cold storage replenishment aisles or central kitchen low temperature areas (-10°C), employees frequently push carts. T201's flexible anti collision curtain cushions impacts; anti icing design eliminates condensation drip slip hazards; two way self reset handles accidental derailment from either direction, reducing maintenance; compact structure fits narrow passages, balancing insulation and traffic efficiency.



SPECIFICATIONS

CHARACTERISTICS

Max.dimensions	W 5500mm x H 5500mm
Opening speed	1.2m/s-2.0m/s
Closing speed	0.5m/s-1.2m/s
Air permeability	Great
Structure covers	Galvanised Option:Stainless steel
Curtain thickness	13 mm
Safety devices	Infrared barrier And Radio safety edge
Emergency switch	Resettable door curtain optional: UPS
Advised operating tem	10°C to -25°C
Motor	Power 0.75kW or 1.5kW IP rating：IP65
Control box	Provided with：Open/Close button, Emergency switch,supply switch
Colour option	RAL5002 RAL1003 RAL7046 RAL2004 Other colors can be customized

ROBUST & DURABLE
Built to last

EXCELLENT SEALING
Minimizes air leakage

SAFE & RELIABLE
Multiple safety protections

SMOOTH OPERATION
High performance and efficiency

EASY MAINTENANCE
Simple structure, easy service

BROADUP

ABOUT US

Founded in 2005, Victory Door is an industrial door manufacturer integrating R&D, production, and sales. With factories in Guangzhou and Hebei, and an R&D team in Beijing, we adhere to Quality First – strict in-house quality control from raw materials to finished products. All doors are CE, SGS, EMC, and IEC certified, and produced in our own facilities. Product range: cold storage doors (-30°C), cleanroom doors (SGS ISO 6/7), high-speed doors, stacking doors, spiral doors, and loading bay systems. Quality is our culture, from our factory to your door.

BEIJING VICTORY DOOR CO., LTD.

Address:
No. 5 Jingwa Street, Agricultural Zhongguancun,
Pinggu District, Beijing, China

GUANGZHOU VICTORY DOOR CO., LTD.

Address:
Room 901-902, Jiatai Building, No. 58 Huancui South Road,
Liwan District, Guangzhou, China

Contact：Ben
+86-17322043190
ben@broadup.com.cn

Contact：Eric
+86-13302291975
victorydoor@broadup.com.cn

Website
www.victorydoor.com