Installation Hole Layout Diagram
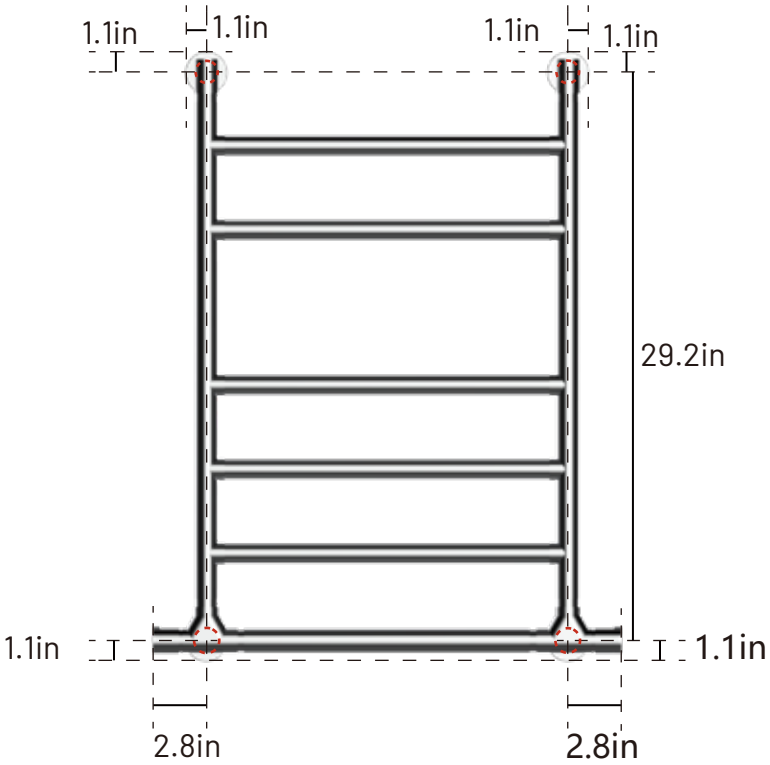
Product dimensions are for design reference only, and subject to change with notice.