IP Series - High Protection Remote IO
IO-Link Master & Slave

User Manual

V1.00

IP Series – High protection level remote IO

Odot Automation System Co., Ltd.

Copyright ©2025 Odot Automation all rights reserved

Version information

Date	Version	Modification	Author
2025-11-12	V1.00	Release Version	YPP

Ownership Rights Information

Without the permission of the copyright owner， all or part of this document shall not be republished as a paper or electronic document.

Disclaimer

This document is only intended to assist the reader in using the products, and the company shall not be responsible for any loss or error caused by the use of the information in this document. The product and text described in this document are under constant development and refinement. Odot Automation System Co., Ltd. has the right to modify this document without notifying users.

Software Download

Please log on the official website: www.odotautomation.com and click on the corresponding product page to download.

Catalog

Legal Statement 6
Security Information 7
About This Manual 10
1 Product Overview 12
1.1 Module Feature 13
1.2 Module Naming Rules 14
1.3 Selection Table 16
1.4 Module Installation 17
1.5 Disclaimer of Warranties 20
2 IO-Link Master Module 22
IP-EC-8IA EtherCAT Slave & 8 Channels IO-Link Master Module/Up to 16 Digital Input or Output Configurable 22
1 Module Features 22
2 Technical Parameter 23
3 Hardware Interfaces 24
4 Configuration Parameter Definition 30
5 Process Data Definition 41
6 Dimension 52
IP-PN-8IA PROFINET Slave & 8 Channels IO-Link Master Module/Up to 16 Digital Input or Output Configurable 53
1 Module Features 53
2 Technical Parameter 54
3 Hardware Interface 56
4 Configuration Parameter Definition 62
5 Process Data Definition 74
6 Dimension 85
3 IO-Link Slave 86
IP-IA-8DIP8DOP IO-Link Slave/ 8 Channels Digital Input (PNP) & 8 Channels Digital Output (PNP) 86
1 Module Features 86
2 Technical Parameter 87
3 Hardware Description 89
4 Configuration Parameter 93
5 Process Data Definition 95
6 Dimension 96
IP-IA-8DIN8DON IO-Link Slave/ 8 Channels Digital Input (NPN) & 8 Channels Digital Output (NPN) 97
1 Module Feature 97
2 Technical Parameter 98
3 Hardware Description 100

4 Configuration Parameter....104
5 Process Data Definition....106
6 Dimension....107
IP-IA-16DIP IO-Link Slave/ 16 Channels Digital Input (PNP)....108
1 Module Features....108
2 Technical Parameter....109
3 Hardware Description....110
4 Configuration Parameter....114
5 Process Data Definition....115
6 Dimension....116
IP-IA-16DIN IO-Link Slave/ 16 Channels Digital Input (NPN)....117
1 Module Features....117
2 Technical Parameter....118
3 Hardware Description....120
4 Configuration Parameter....124
5 Process Data Definition....125
6 Dimension....126
IP-IO-16DIPDOP IO-Link Slave/ 16 Channels Digital Input /Output (PNP)....127
1 Module Features....127
2 Technical Parameter....128
3 Hardware Description....130
4 Configuration Parameter....134
5 Process Data Definition....137
6 Dimension....138
IP-IO-16DINDON IO-Link Slave/ 16 Channels Digital Input/Output (NPN)....139
1 Module Features....139
2 Technical Parameter....140
3 Hardware Description....142
4 Configuration Parameter....146
5 Process Data Definition....149
6 Dimension....150

Legal Statement

The ODOT Automation brand and any trademarks of Sichuan ODOT Automation System Co., Ltd. (hereinafter referred to as ODOT Automation) and its affiliates mentioned in this guide are the property of Sichuan ODOT Automation System Co., Ltd. or its subsidiaries. All other brands mentioned in this document are the trademarks of their respective owners. This guide and its contents are protected by applicable copyright laws and are provided for informational purposes only. No part of this guide may be reproduced or transmitted for any purpose, in any form or by any means (electronic, mechanical, photocopying, recording or otherwise) without the prior written permission of Sichuan ODOT Automation System Co., Ltd.

Sichuan ODOT Automation System Co., Ltd. grants no right or license to commercial use of this guide or its contents, other than a non-exclusive personal license to consult on an "AS IS" basis.

The products and equipment of Sichuan ODOT Automation System Co., Ltd. shall be installed, operated, serviced and maintained by qualified personnel.

As standards, specifications and designs change from time to time, the information contained in this guide is subject to change without notice.

To the extent permitted by applicable laws, Sichuan ODOT Automation System Co., Ltd. and its affiliates will not assume any responsibility or liability for any errors or omissions in the information content of this document, or for the consequences caused or arising from the use of the information contained herein.

As part of a responsible, inclusive business, we will update content that includes non-inclusive terms. However, until we complete the update process, our content may still contain standardized industry terminology that our customers deem inappropriate.

Copyright © 2025 Sichuan ODOT Automation System Co., Ltd. all rights reserved.

Security Information

Important Information

Before attempting to install, operate, service, or maintain the equipment, please read the following instructions carefully and look to familiarize yourself with the equipment. Specific information described below may appear elsewhere in the text or on the device to alert the user to potential hazards, or to call attention to information that clarifies or simplifies a procedure. If the equipment is used in a manner not specified by the manufacturer, the protection provided by the equipment may be impaired.

The addition of this symbol to a DANGER or WARNING label indicates the presence of an electric shock hazard which, if instructions are not followed, will result in personal injury.

This is a symbol to remind you to be safe. Remind users of the possible danger of personal injury. Please follow all safety precautions with this symbol to avoid possible personal injury or even death.

DANGER

DANGER INDICATES A HAZARDOUS SITUATION WHICH, IF NOT AVOIDED, WILL RESULT IN SERIOUS INJURY OR DEATH.

WARNING

WARNING INDICATES A HAZARDOUS SITUATION WHICH, IF NOT AVOIDED, COULD RESULT IN SERIOUS INJURY OR DEATH.

CAUTION

CAUTION INDICATES A HAZARDOUS SITUATION WHICH, IF NOT AVOIDED, COULD RESULT IN MINOR OR MODERATE INJURY OR DEATH.

NOTICE

NOTICE INDICATES A HAZARD NOT RELATED TO PERSONAL INJURY.

Attention

Installation, operation, repair and maintenance of electrical equipment is restricted to qualified personnel only. Sichuan ODOT Automation System Co., Ltd. shall not be responsible for any consequences arising from the use of this user manual.

Qualified personnel are those who have the skills and knowledge related to the manufacturing and operation of electrical equipment and its installation, and who have been trained in safety to be able to detect and avoid related hazards.

Personnel Qualification

Only properly trained personnel who are familiar with and understand the contents of this manual and all other related product documentation are authorized to use this product.

Qualified personnel must be able to detect possible hazards arising from setting parameters and modifying parameter values, usually from mechanical, electrical or electronic equipment. Qualified personnel must be familiar with the various standards, rules and regulations aimed at preventing industrial accidents and must comply with them when designing and building systems.

Expected Usage

The products described or referred to in this document, together with their software, accessories and options, are expansion modules designed for industrial use and should be used in accordance with the relevant instructions, guide, examples and safety instructions in this document and other supporting documents.

This product must be used in compliance with all applicable safety laws and regulations, specified requirements and technical parameters.

Due to planned application, you must perform a risk assessment before using this product. Appropriate safety-related measures must be taken based on the results of the evaluation.

Since this product should be used as an integral part of the entire machine or process, the safety of personnel must be ensured through the design of the entire system.

This product must be used with the specified cables and accessories. Please use only original spare parts and original replacement parts.

Any use other than that expressly permitted is prohibited as unintended hazards may result.

Network Safety Tips

A. Use controllers and devices only in protected environments to minimize

network exposure and ensure inaccessibility from the outside.

B. Use a firewall to protect the control system network and separate it from other.

C. If remote access is required, please use a VPN (Virtual Private Network) tunnel.

D. Restrict access to development and control systems by physical means, operating system capabilities, etc.

E. Protect development and control systems with the latest virus detection solutions.

About This Manual

Document Scope

This guide introduces network adapter modules and expansion IO modules in the distributed remote IO systems, and provides an overview of the features, function descriptions, configuration methods, wiring diagrams, and installation details of related products.

Validity Statement

In accordance with our policy of continuous improvement, we will continue to revise the content of this manual to make it clearer and more accurate.

Sichuan ODOT Automation System Co., Ltd. reserves the right of final interpretation of this manual.

Product Information

DANGER

HAZARD OF ELECTRIC SHOCK, EXPLOSION, OR ARC FLASH

Disconnect power from all equipment (including connected equipment) before removing any covers, or installing or removing any accessories, hardware, cables, or wires, unless otherwise specified in the corresponding hardware guide for this equipment.

As directed, at the appropriate place and time, it is important to always use a properly rated voltage sensing devices to detect if the power is off.

Replace and secure all covers, accessories, hardware, cables and wires, and verify proper ground connection before powering on the device.

When operating this equipment and related products, the specified voltage must be used.

Failure to follow instructions specified by the manufacturer may result in serious consequences such as death, personal injury, or damage to equipment since the protection provided by the equipment may be impaired.

DANGER

POSSIBLE EXPLOSION HAZARD

Do not connect or disconnect equipment unless it is unplugged or the location is known to be non-hazardous.

Use the USB port (if equipped) only if the work area is known to be non-hazardous.

Failure to follow instructions specified by the manufacturer may result in serious consequences such as death, personal injury, or damage to equipment since the protection provided by the equipment may be impaired.

⚠ WARNING

OUT OF CONTROL

The designer of any control scheme must account for the possible failure of the control path and provide a means for certain critical control functions could be restored to a safe state during and after path failure. These critical control functions include emergency stop, over-travel stop, power-off restart, and similar safety measures.
For critical control functions, separate or redundant control paths must be provided.
System control paths may include communication links. Consideration must be given to the implications of unforeseen transmission delays or link failures.
Comply with all accident prevention regulations and local safety guidelines.
To guarantee proper operation, each implementation of the device must be fully tested individually before being placed into service.
Failure to follow instructions specified by the manufacturer may result in serious consequences such as death, personal injury, or damage to equipment since the protection provided by the equipment may be impaired.

⚠ WARNING

UNINTENDED EQUIPMENT OPERATION

Only use software approved by Sichuan ODOT Automation System Co., Ltd. for use with this equipment.

Please update the application after every change to the physical hardware configuration.

Failure to follow instructions specified by the manufacturer may result in serious consequences such as death, personal injury, or damage to equipment since the protection provided by the equipment may be impaired.

⚠ WARNING

UNINTENDED EQUIPMENT OPERATION

The risk assessment should include the possibility of a communication failure between the logic controller and any I/O expansion modules.

If the I/O module output signal "maintain current value" does not meet your application requirements when the I/O expansion Bus error occurs, other solutions should be used to ensure that the application can cope with Bus error events.

Failure to follow instructions specified by the manufacturer may result in serious consequences such as death, personal injury, or damage to equipment since the protection provided by the equipment may be impaired.

1 Product Overview

The high-protection IP series modules include IO-Link master modules and IO-Link slaves, which support the latest IO-Link V1.1.4 standard to provide efficient and reliable communication control for sensors and actuators. The IO-Link master module integrates EtherCAT protocol, PROFINET protocol and IO-Link protocol, which can be connected with equipment from multiple manufacturers and can be directly connected to industrial Ethernet to ensure real-time system performance and stability. It supports 8 Class A ports, each of which can be configured independently to achieve efficient management of sensors and actuators.

The module has strong environmental adaptability, IP67 protection level, and an all-metal casing, which can operate stably in harsh industrial environments such as moisture, dust, and oil stains. The module adopts a standard M12 connector and is plug and play. The module has diagnostic functions and supports functions such as power diagnosis and communication diagnosis.

1.1 Module Feature

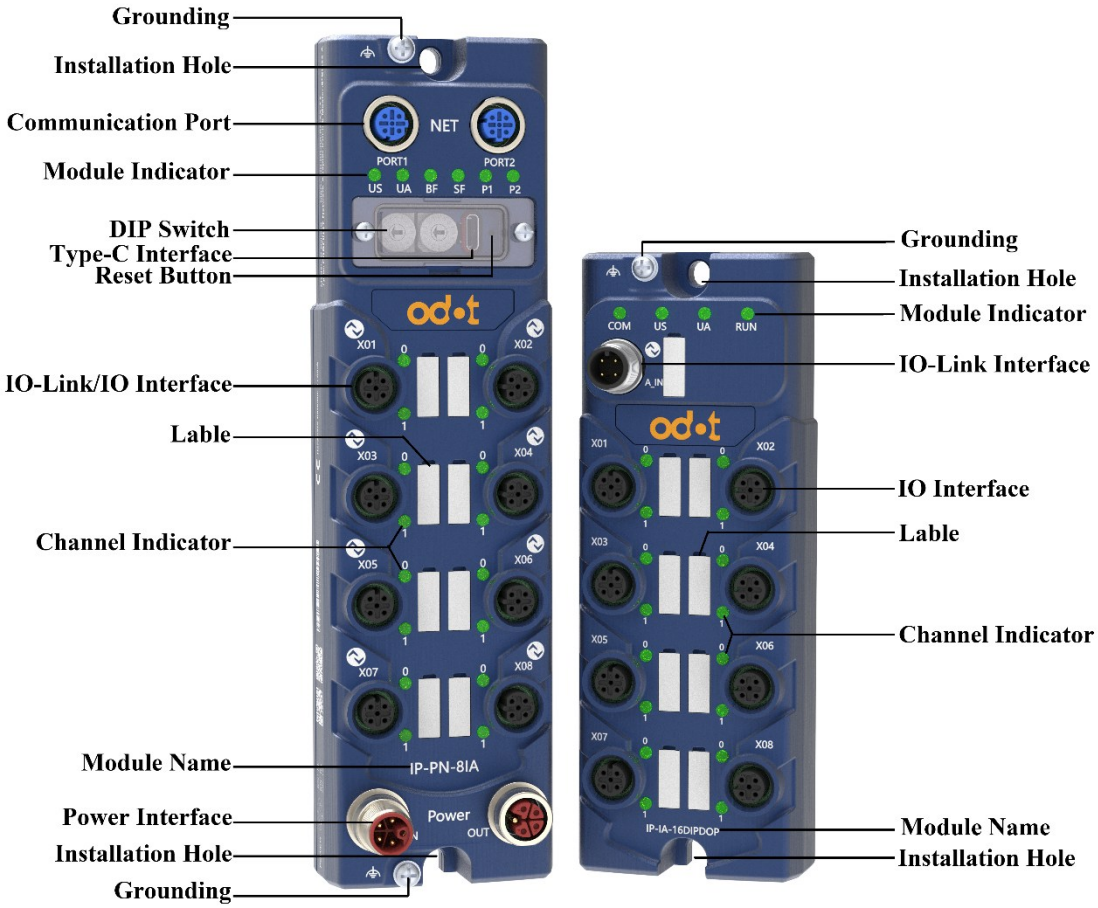

1.2 Module Naming Rules

IO-Link Master module naming rules

IP - EC - 8 IA

Product Series Code: IP

Communication Protocol Code:
PN: PROFINET Protcol
EC: EtherCAT Protcol
EP: EtherNet/IP Protocol
MT: Modbus TCP Protocol
CF: CC-Link IE Field Basic Protocol
MR: Modbus RTU Protocol
DP: PROFIBUS DP Protocol
CA: CANopen Protocol
CC: CC-Link Protocol

Number of Channel

IO Code:
IA: IO-Link Class A Master Port
IB: IO-Link Class B Master Port

IO-Link Slave module naming rules

IP - IA - 8 DIP 8 DOP

Product Series Code: IP

Communication Protocol Code:
IA: IO-Link Slave Class A
IB: IO-Link Slave Class B

Number of Input Channel

Number of Output Channel

IO Port Code:
DIP: Digital Input--High Level
DIN: Digital Input--Low Level
DIM: Digital Input--High&Low Level
DOP: Digital Transistor Output--High Level
DON: Digital Transistor Output--Low Level
DOM: Digital Transistor Output--High&Low Level
DOR: Digital Output Relay
The above code can be configured after any combination
AII: Analog Input--Current
AIU: Analog Input--Voltage
AIIU: Analog Input--Current/Voltage, Configrable
TD: Analog Input--Thermal Resistance (PT-100/PT1000)
TDH: Analog Input--Thermal Resistance (PT-100)
TDT: Analog Input--Thermal Resistance (PT1000)
TC: Analog Input--Thermocouple
TDTC: Analog Input--Thermal Resistance/Thermocouple, Configrable
CT: High-speed Counting--24V Input
CTF: High-speed Counting--5V Input
DS: High-speed Counting--Differential Input
SSI: Absolute Value
AOI: Analog Output--Current
AOU: Analog Output--Voltage
AOIU: Analog Output--Current&Voltage, Configrable
PWM: PWM Output
PTO: High-speed Pulse Output

1.3 Selection Table

Module	Function description	Status
IO-Link Master		
IP-EC-8IA	Support EtherCAT protocol, and IO-Link master module, 8*Class A interface, each port can be configured independently, support IO-Link/DI/DO, up to 16 digital input or output channels can be configured	Published
IP-PN-8IA	Support PROFINET protocol, and IO-Link master module, 8*Class A interface, each port can be configured independently, support IO-Link/DI/DO, up to 16 digital input or output channels can be configured	Published
IO-Link Slave		
IP-IA-16DIP	IO-Link slave module, 16 channels high level digital input, PNP	Published
IP-IA-16DIN	IO-Link slave module, 16 channels low level digital input, NPN	Published
IP-IA-8DIP8DOP	IO-Link slave module, 8 channels high level digital input (PNP) & 8 channels high level digital output (PNP)	Published
IP-IA-8DIN8DON	IO-Link slave module, 8 channels low level digital input (NPN) & 8 channels low level digital output (NPN)	Published
IP-IA-16DIPDOP	IO-Link slave module, 16 channels high level input or output (configurable), PNP	Published
IP-IA-16DINDON	IO-Link slave module, 16 channels low level input or output (configurable), NPN	Published

1.4 Module Installation

1 IO-Link master dimensions

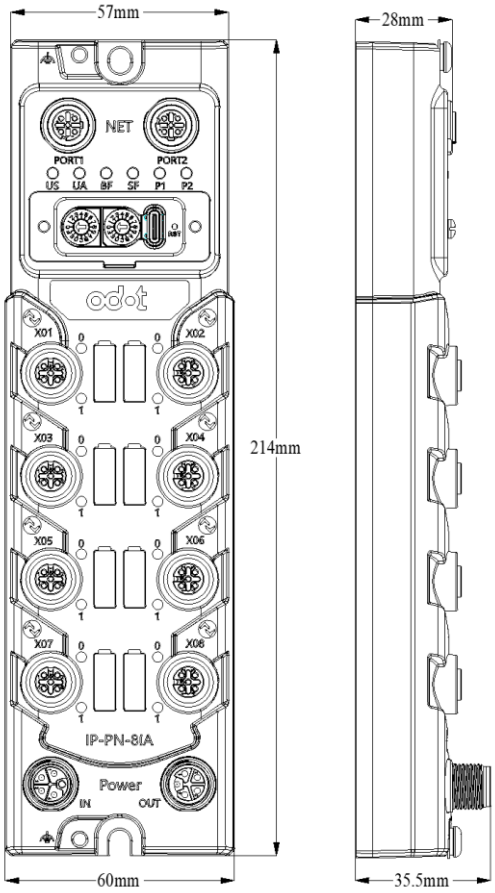

2 IO-Link slave dimensions

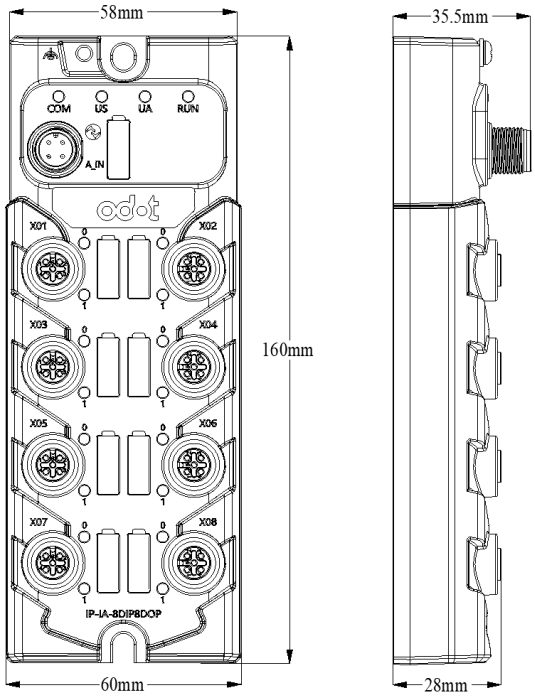

3 Installation diagram of IO-Link master

Use 2 M5 screws with a length greater than 15mm for fixing, and the spacing between the fixing screw holes should be controlled in the range of 205mm~207mm.

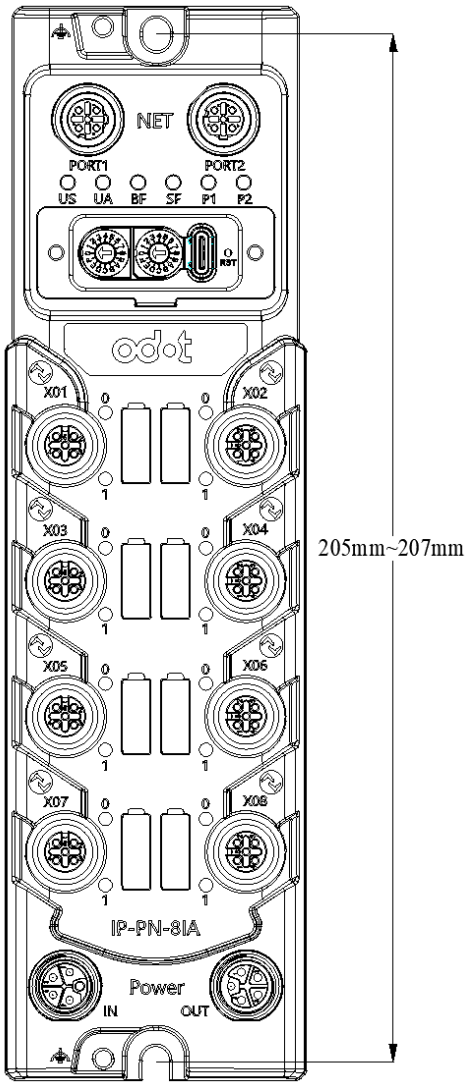

4 Installation diagram of IO-Link slave

Use 2 M5 screws with a length greater than 15mm for fixing, and the spacing between the fixing screw holes should be controlled in the range of 150mm-152mm.

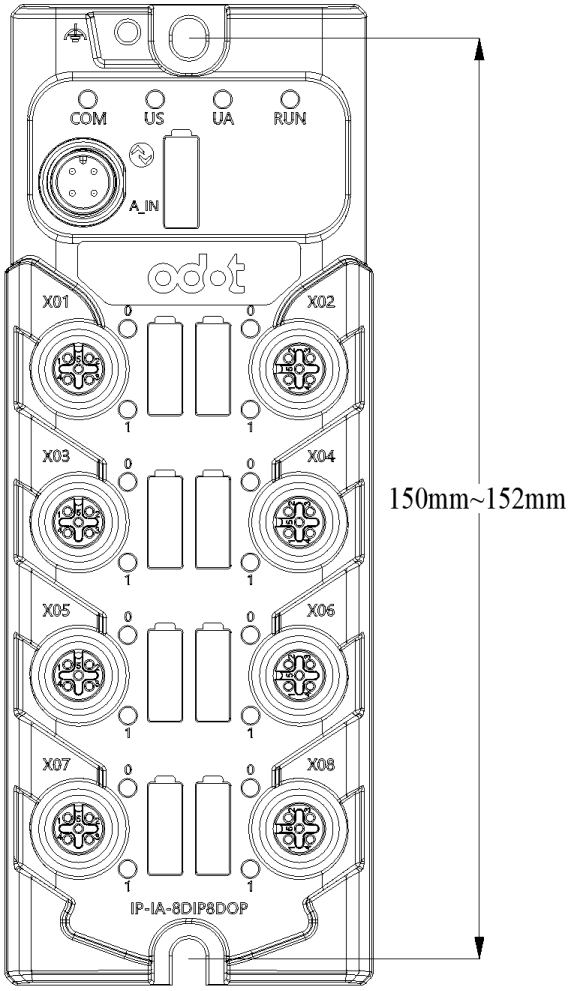

1.5 Disclaimer of Warranties

Product Usage

NOTICE
• WHEN INSTALLING, OPERATING, AND MAINTAINING THE EQUIPMENT, DO NOT EXCEED ANY OF THE RATINGS SPECIFIED IN THE ELECTRICAL CHARACTERISTICS; • WHEN INSTALLING, OPERATING, AND MAINTAINING THE EQUIPMENT, DO NOT EXCEED ANY OF THE RATINGS SPECIFIED IN THE ENVIRONMENTAL CHARACTERISTICS. DO NOT USE THE PRODUCT IN THE FOLLOWING PLACES: PLACES WITH DUST, OIL FUMES, CONDUCTIVE DUST, CORROSIVE GASES, AND FLAMMABLE GASES; DO NOT EXPOSE TO HIGH TEMPERATURES, CONDENSATION, WIND AND RAIN; VIBRATION AND SHOCK WILL ALSO CAUSE DAMAGE TO THE PRODUCT; FAILURE TO FOLLOW THE INSTRUCTIONS MAY RENDER THE PROTECTION PROVIDED BY THE DEVICE NULL AND MAY RESULT IN MINOR BODILY INJURY OR DAMAGE TO THE DEVICE.

Disclaimer of Warranties

The Company shall not be liable for any damage or malfunction of the equipment caused by:

1. Transportation damage: equipment damage caused by improper transportation or packaging;

2. Natural factors: damage caused by lightning strikes, voltage fluctuations, water ingress or natural disasters (such as fires, floods, etc.);

3. Improper use: damage caused by overload, non-standard operation, unauthorized modification or use of unqualified accessories;

4. Unauthorized maintenance: equipment failure caused by unauthorized maintenance or alteration;

5. Other non-product reasons: damage caused by other reasons that have nothing to do with the equipment itself.

Repair services

1. For the damage caused by the above reasons, the company will charge the repair fee according to the actual situation.

2. Outside the warranty period, the company provides paid maintenance services, and the cost is charged according to the maintenance situation.

Assumption of Risk

The company shall not be liable for casualties, property damage or other related losses caused by the use of the equipment. All risks are borne by the user.

2 IO-Link Master Module

IP-EC-8IA EtherCAT Slave & 8 Channels IO-Link Master Module/Up to 16 Digital Input or Output Configurable

1 Module Features

- EtherCAT is seamlessly integrated, supports standard EtherCAT protocol, and has two network interfaces (M12, D-Code 4 Pin) for direct access to Industrial Ethernet for high-speed communication with PLC and other devices, ensuring real-time system performance and stability.
- Supports IO-Link V1.1.4 standard, 8 Class A ports, each port can independently configure Pin 2/Pin 4 input and output, up to 16 digital input or output channels can be configured.
- IP67 protection level: It has excellent dustproof and waterproof performance, and can operate stably in harsh industrial environments such as moisture, dust, and oil stains without additional protective measures.
- Module diagnosis: It has functions such as power supply undervoltage/overvoltage detection and communication status diagnosis.
- Temperature protection: built-in temperature sensor, real-time monitoring of the module's operating temperature, automatic alarm and protective measures for exceeding the threshold, extending the module's service life.
- Plug and play: Supports automatic device identification and parameter configuration, simplifying the installation and commissioning process and lowering the threshold for user use.
- Online upgrade: If firmware upgrade is required, online upgrade can be achieved without disassembly.

2 Technical Parameter

Power Port	
Us Power Supply Rated Voltage	24 V DC
Us Power Supply Current	Max.8A
Ua Power Supply Rated Voltage	24 V DC
Ua Power Supply Current	Max.8 A
Us/Ua Power Interface Type	2 M12: L-code 5 Pins, 1 pin end (input) and 1 hole end (output)
Pin Definition	M12 pin end (input) / hole end (output): Pin1: Us+, system power Pin2: Ua-, field power Pin3: Us-, system power Pin4: Ua+, field power Pin5: FG, functional grounding
Module Consumption	Max.200 mA@24 V DC
Network Port	
Number of Network	2 M12, D-code 4 Pin, hole end, 1 IN, 1 OUT
Pin Definition	Pin1: Sender Tx+ Pin2: Receiver Rx+ Pin3: Sender Tx- Pin4: Receiver Rx-
IO-Link Class-A Port	
Quantity	8 M12, A-code 5 Pin, hole end
Port Definition	Pin1: 24VDC (Us+), positive power supply Pin2: I/Q, DI/DO configurable Pin3: GND(Us-), negative power supply Pin4: C/Q, IO-Link/DI/DO configurable Pin5: NC, unused
Output Power Supply Current	(1) Pin1(Us+)/Pin3(Us-): Rated output current 1.6A (2) Pin2(Us+)/Pin3(Us-): Rated output current 2A
Communication Protocol	
Protocol	EtherCAT
Fieldbus Bytes	Input: Max.1024 bytes Output: Max.1024 bytes
Site Alias	DIP switch
Network Interface	2 M12, D-Code 4 Pin, hole end, 1 IN 1 OUT
IO-Link Communication Protocol	
Protocol Standard	IO-Link V1.1 master protocol
Transfer Rate	COM1(4.8kbps), COM2(38.4kbps), COM3(230.4kbps), adaptive transfer rate is supported
IO-Link Maximum Line Length	Point-to-point 20 meters
Dimension	
Dimension	214 mm *60 mm *35.5 mm

3 Hardware Interfaces

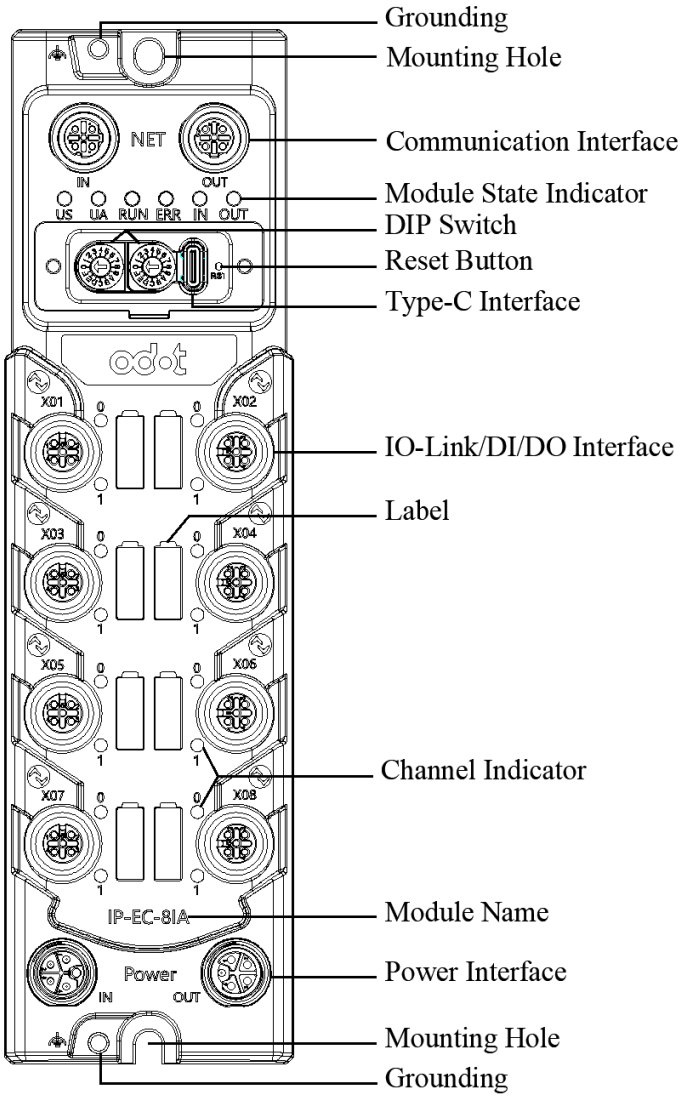

3.1 LED Indicator Definition

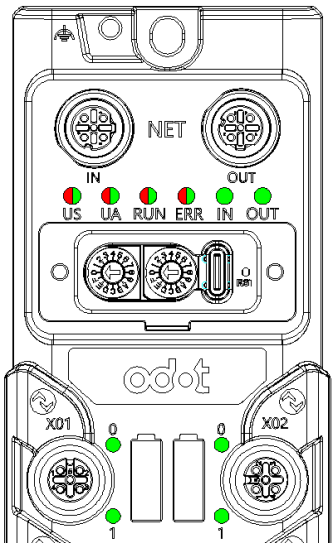

Us Power indicator (Red/ Green)	Description
ON (Green)	Us Power supply is normal
ON (Red)	Us Power supply overvoltage (30 V DC~36 V DC)
Flash (Red)	Us Power supply undervoltage (9VDC~18VDC)
OFF	The module is not powered or the supply voltage is less than 9VDC
Ua Power indicator (Red/ Green)	Description
ON (Green)	Ua Power supply is normal
ON (Red)	Ua Power supply overvoltage (30 V DC~36 V DC)
Flash (Red)	Ua Power supply undervoltage (9VDC~18VDC)
RUN Network running indicator (Red/Green)	Description
ON (Green)	ECAT slave state OP
Slow flash (Green)	ECAT slave state SafeOP
Fast flash (Green)	ECAT slave state PreOP
ON (Red)	ESC initialization failed
ERR Network error indicator (Red/Green)	Description
ON (Green)	EEPROM initialization succeeded
Slow flash (Green)	EEPROM power-on initialization
ON (Red)	System internal error
Slow flash (Red)	IO-Link master drops
Flashes twice per second (Red)	IO-Link master connection failed
IN/OUT network status indicator (Green)	Description
ON	The network connection is successful
Flash	There is data transfer
OFF	Network connection failed
Pin2 Indicator (Green/Top)	Description
ON	Pin2 Input/Output State 1
OFF	Pin2 Input/Output/Unconfigured State 0

Pin4 Indicator (Green/Bottom)	Description
ON	Pin4 IO-Link mode communicates normal/SIO mode input/output state 1
OFF	Pin4 IO-Link mode is not connected to /SIO mode input/output state 0
Flash	Abnormal connection of Pin4 IO-Link communication (disconnected or abnormal after connection)

3.2 Communication Configuration Interface

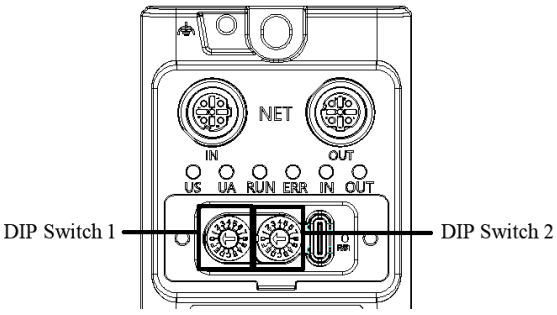

Rotary switch for setting site alias. When the value of rotary switch is 0, the site name is default value or configured by the PLC.

When the value of rotary switch is not 0, the value of site name is determined by the rotary switch, the relationship is shown in the following table:

Rotary Switch 1	Rotary Switch 2	Rotary Value	Site Alias
0H	0H	00H	EtherCAT Master configuration
0H	1H	01H	1
0H	…	…	…
0H	FH	0FH	15
1H	0H	10H	16
1H	1H	11H	17
1H	…	…	…
1H	FH	1FH	31
…	…	…	…
FH	FH	FFH	255

Type-C interface: Configuration port, standard Type-C interface for configuring device parameters, firmware upgrades.

RST: Reset button, press and hold the button for more than 5 seconds, and all module parameters will return to their default values.

3.3 Port Definition

Power input port definition

Port Schematic Diagram	Pin	Mark	Description
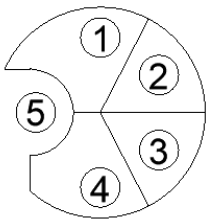	1	Us+	System power positive
	2	Ua-	Field power negative
	3	Us-	System power negative
	4	Ua+	Field power positive
	5	FG	Functional grounding

Power output port definition

Port Schematic Diagram	Pin	Mark	Description
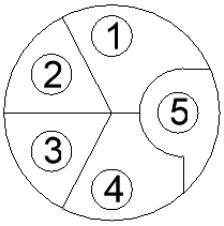	1	Us+	System power positive
	2	Ua-	Field power negative
	3	Us-	System power negative
	4	Ua+	Field power positive
	5	FG	Functional grounding

EtherCAT Pin definition

Port Schematic Diagram	Pin	Mark	Description
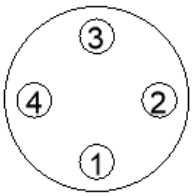	1	Tx+	Send +
	2	Rx+	Receive +
	3	Tx-	Send -
	4	Rx-	Receive -

IO-Link port definition (X01~X08)

Port Schematic Diagram	Pin	Mark	Description
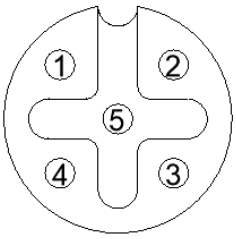	1	24VDC	+24VDC power supply (Us+)
	2	I/Q	Digital input or output, configurable
	3	GND	GND（Us-）
	4	C/Q	IO-Link mode or digital input or digital output, configurable
	5	NC	Unused

3.4 Wirring

1. IO-Link Device

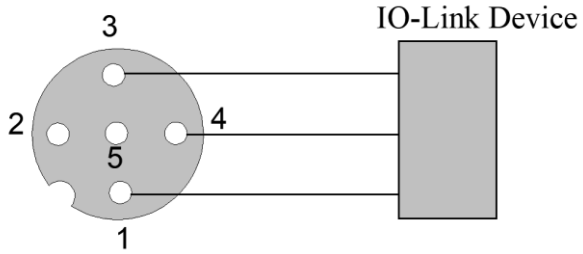

2. DI Device –High level input /PNP (Pin2 & Pin4)

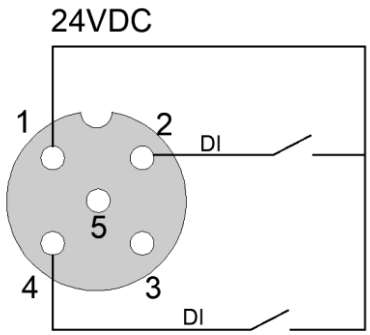

3. DO Device –High level output /PNP (Pin2 & Pin4)

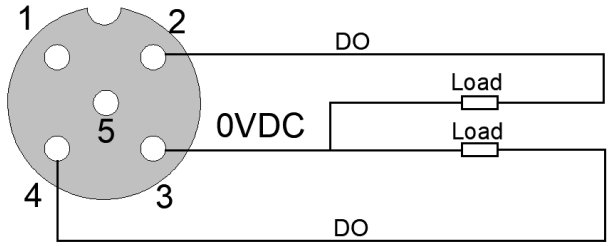

4. DO Device–Low level output /NPN (Pin4)

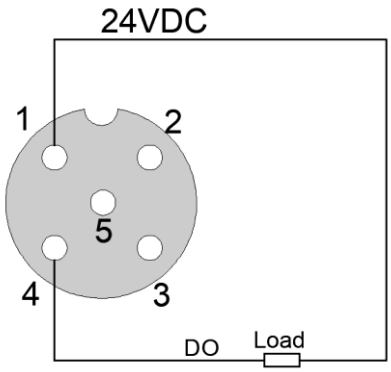

4 Configuration Parameter Definition

1 EtherCAT slave configuration parameter definition

Configuration parameters								
Bit No	Bit 7	Bit 6	Bit 5	Bit 4	Bit 3	Bit 2	Bit 1	Bit 0
Byte 0	Reserved						Fault Action for Input	Config Source
Byte 1	Station Alias							
Byte 2								
Byte 3~35	Reserved							

Data description:

Config Source: Configuration parameter source (default: 0).

0: Configuration software

1: Fieldbus

Fault Action for Input: Input fault handling method, when the IO module is offline, the adapter processes the input data of the IO module in this mode. (Default: 0).

0: Hold last input value

1: Cleaning input value

ESC Station Alias: EtherCAT site (read-only).

2 IO-Link master configuration parameter definition

IO-Link master security status configuration parameters								
Bit No.	Bit 7	Bit 6	Bit 5	Bit 4	Bit 3	Bit 2	Bit 1	Bit 0
Byte 0	Safe State Port 4 Pin 2		Safe State Port 3 Pin 2		Safe State Port 2 Pin 2		Safe State Port 1 Pin 2	
Byte 1	Safe State Port 8 Pin 2		Safe State Port 7 Pin 2		Safe State Port 6 Pin 2		Safe State Port 5 Pin 2	
Byte 2	Safe State Port 4 Pin 4		Safe State Port 3 Pin 4		Safe State Port 2 Pin 4		Safe State Port 1 Pin 4	
Byte 3	Safe State Port 8 Pin 4		Safe State Port 7 Pin 4		Safe State Port 6 Pin 4		Safe State Port 5 Pin 4	
Input filtering configuration parameters								
Byte 4	Pin2 Input Filtering Time (ms)							
Byte 5								
Byte 6	Pin2 Input Holding Time (ms)							
Byte 7	Pin4 Input Filtering Time (ms)							

Byte 8	
Byte 9	Pin4 Input Holding Time (ms)
Byte 10	Reserved

Data description:

Safe State Port (1~8) Pin 2: Port 1~8, output value when Pin2 fails (default value: 0).

0: output 0

1: Output 1

2: Hold last value

Safe State Port (1~8) Pin 4: Port 1~8, output value when Pin4 fails (default value: 0).

0: output 0

1: Output 1

2: Hold last value

Pin2 Input Filtering Time (ms): Pin2 input filter time (default: 10ms).

Pin2 Input Holding Time (ms): Pin2 input holding time (default: 0).

0: Disable

1: 200ms

2: 500ms

3: 1000ms

4: 1500ms

5: 2000ms

6: 3000ms

7: 5000ms

Pin4 Input Filtering Time (ms): SIO mode Pin4 input filter time (default: 10ms).

Pin4 Input Holding Time (ms): SIO mode Pin4 input holding time (default: 0).

0: Disable

1: 200ms

2: 500ms

3: 1000ms

4: 1500ms

5: 2000ms

6: 3000ms

7: 5000ms

3 IO-Link Common Submodule Configuration Parameter Definition

Port configuration parameters								
Bit No.	Bit 7	Bit 6	Bit 5	Bit 4	Bit 3	Bit 2	Bit 1	Bit 0
Byte 0	Port Mode							
Byte 1	Validation							
Byte 2	IQbehavior (Pin2)							
Byte 3	Cycle time							
Byte 4	Vendor ID							
Byte 5								
Byte 6	Device ID							
Byte 7								
Byte 8								
Configuration parameter reset								
Byte 9	Reset to factory defaults							
Write ISDU configuration parameters								
Byte 10	ISDU Index							
Byte 11								
Byte 12	ISDU Subindex							
Byte 13	ISDU Length							
Byte 14	ISDU Parameter 0							
Byte 15	ISDU Parameter 1							
Byte 16	ISDU Parameter 2							
Byte 17	ISDU Parameter 3							
Byte 18	ISDU Parameter 4							
Byte 19	ISDU Parameter 5							
Byte 20	ISDU Parameter 6							
Byte 21	ISDU Parameter 7							
Byte 22	ISDU Parameter 8							
Byte 23	ISDU Parameter 9							
Byte 24	ISDU Parameter 10							
Byte 25	ISDU Parameter 11							
Byte 26	ISDU Parameter 12							
Byte 27	ISDU Parameter 13							
Byte 28	ISDU Parameter 14							
Byte 29	ISDU Parameter 15							
Byte 30	ISDU Parameter 16							
Byte 31	ISDU Parameter 17							
Byte 32	ISDU Parameter 18							
Byte 33	ISDU Parameter 19							
Byte 34	ISDU Parameter 20							
Byte 35	ISDU Parameter 21							

Byte 36	ISDU Parameter 22
Byte 37	ISDU Parameter 23
Byte 38	ISDU Parameter 24
Byte 39	ISDU Parameter 25
Byte 40	ISDU Parameter 26
Byte 41	ISDU Parameter 27
Byte 42	ISDU Parameter 28
Byte 43	ISDU Parameter 29
Byte 44	ISDU Parameter 30
Byte 45	ISDU Parameter 31
Write ISDU configuration parameter 1	
36 Bytes	
Write ISDU configuration parameters…	
36 Bytes	

Data description:

Port Mode: IO-Link port mode configuration (default: 1).

0: Manual

1: AutoStart

Validation: checksum backup (default: 0).

0: NO Device Check

1: DS Disable

2: Backup/Restore

3: Restore

IQbehavior (Pin2): Configure Pin2 mode (default: 0).

0: Not Support

1: Digital Input

2: Digital Output

Cycle time: The desired cycle time, this parameter is set when the equipment needs strict cycle time requirements, normal use can be set to 0, the range is 0~132.8ms (default value: 0).

Vendor ID: Vendor ID number.

Device ID: Device ID number.

Reset to factory defaults: Restore the configuration parameters to factory settings (default value: 0).

0: Not Reset

1: Reset (Need to manually switch back to Not Reset after reset)

ISDU Index: Write the ISDU index number (high bit first, low bit last).

ISDU Subindex: Write the ISDU subindex number.

ISDU Length: Write ISDU data length, up to 32 bytes.

ISDU Data: Write ISDU data.

4 IP-IA-8DIP8DOP/IP-IA-8DIN8DON Configuration parameter definition

Configuration definition								
Bit No.	Bit 7	Bit 6	Bit 5	Bit 4	Bit 3	Bit 2	Bit 1	Bit 0
Byte 0	Reserved							
Byte 1								
Byte 2								
Byte 3								
Byte 4	Baudrate Select							
Byte 5	Reserved							
Byte 6								
Byte 7								
Byte 8								
Byte 9	Input Holding Time (ms)							
Byte 10	Reserved							
Byte 11								
Byte 12								
Byte 13								
Byte 14	Input Filtering Time (ms)							
Byte 15								
Byte 16	Reserved							
Byte 17								
Byte 18								
Byte 19								
Byte 20	CH15 Fault Output Configuration	CH14 Fault Output Configuration	CH13 Fault Output Configuration	CH12 Fault Output Configuration	CH11 Fault Output Configuration	CH10 Fault Output Configuration	CH9 Fault Output Configuration	CH8 Fault Output Configuration
Byte 21	Reserved							
Byte 22								
Byte 23								
Byte 24								

Byte 25	CH15 Fault Output Value Configuration	CH14 Fault Output Value Configuration	CH13 Fault Output Value Configuration	CH12 Fault Output Value Configuration	CH11 Fault Output Value Configuration	CH10 Fault Output Value Configuration	CH9 Fault Output Value Configuration	CH8 Fault Output Value Configuration

Data description:

Baudrate Select: Values 1-3 can be selected, and changes to the baud rate require a restart to take effect (default value: 2).

1: COM1 (4.8kbps)

2: COM2 (38.4kbps)

3: COM3 (230.4kbps)

Input Holding Time(ms): the input holding time (default: 0).

0: Disable

1: 200ms

2: 500ms

3: 1000ms

4: 1500ms

5: 2000ms

6: 3000ms

7: 5000ms

Input Filtering Time(ms): the input filtering time (default: 0).

CHx Fault output configuration: Channel x fault output enabled (default: 0).

0: Hold last output value

1: Output fault value

CHx Fault output value configuration: Channel x fault output value (default: 0).

0: Output 0

1: Output 1

5 IP-IA-16DIPDOP/IP-IA-16DINDON Configuration parameter definition

Configuration parameter								
Bit No.	Bit 7	Bit 6	Bit 5	Bit 4	Bit 3	Bit 2	Bit 1	Bit 0

Byte 0	Reserved							
Byte 1								
Byte 2								
Byte 3								
Byte 4	Baudrate Select							
Byte 5	Reserved							
Byte 6								
Byte 7								
Byte 8								
Byte 9	CH7 Configure input or output	CH6 Configure input or output	CH5 Configure input or output	CH4 Configure input or output	CH3 Configure input or output	CH2 Configure input or output	CH1 Configure input or output	CH0 Configure input or output
Byte 10	CH15 Configure input or output	CH14 Configure input or output	CH13 Configure input or output	CH12 Configure input or output	CH11 Configure input or output	CH10 Configure input or output	CH9 Configure input or output	CH8 Configure input or output
Byte 11	Reserved							
Byte 12								
Byte 13								
Byte 14								
Byte 15	Input Holding Time(ms)							
Byte 16	Reserved							
Byte 17								
Byte 18								
Byte 19								
Byte 20	Input Filtering Time (ms)							
Byte 21								
Byte 22								
Byte 23	Reserved							
Byte 24								
Byte 25								
Byte 26								
Byte 27	CH7 Fault Output Configuration	CH6 Fault Output Configuration	CH5 Fault Output Configuration	CH4 Fault Output Configuration	CH3 Fault Output Configuration	CH2 Fault Output Configuration	CH1 Fault Output Configuration	CH0 Fault Output Configuration
Byte 28	CH15 Fault Output Configuration	CH14 Fault Output Configuration	CH13 Fault Output Configuration	CH12 Fault Output Configuration	CH11 Fault Output Configuration	CH10 Fault Output Configuration	CH9 Fault Output Configuration	CH8 Fault Output Configuration
Byte 29	Reserved							
Byte 30								

Byte 31								
Byte 32								
Byte 33	CH7 Fault Output Value Configuration	CH6 Fault Output Value Configuration	CH5 Fault Output Value Configuration	CH4 Fault Output Value Configuration	CH3 Fault Output Value Configuration	CH2 Fault Output Value Configuration	CH1 Fault Output Value Configuration	CH0 Fault Output Value Configuration
Byte 34	CH16 Fault Output Value Configuration	CH15 Fault Output Value Configuration	CH14 Fault Output Value Configuration	CH13 Fault Output Value Configuration	CH12 Fault Output Value Configuration	CH11 Fault Output Value Configuration	CH10 Fault Output Value Configuration	CH8 Fault Output Value Configuration

Data description:

Baudrate Select: Values 1-3 can be selected, and changes to the baud rate require a reboot to take effect (default: 2).

1: COM1 (4.8kbps)

2: COM2 (38.4kbps)

3: COM3 (230.4kbps)

CHx Configure input or output: Channel x function configuration (default: 1).

0: Digital input

1: Digital output

Input Holding Time(ms): Input holding time (default: 0).

0: Disable

1: 200ms

2: 500ms

3: 1000ms

4: 1500ms

5: 2000ms

6: 3000ms

7: 5000ms

Input Filtering Time(ms): Input filtering time (default: 0).

CHx Fault output configuration: Channel x fault output (default: 0).

0: Hold last output value

1: Output fault value

CHx Fault output value configuration: Channel x fault output value (default: 0).

0: Output 0

1: Output 1

6 IP-IA-16DIP/IP-IA-16DIN Configuration parameter definition

Configuration parameter								
Bit No.	Bit 7	Bit 6	Bit 5	Bit 4	Bit 3	Bit 2	Bit 1	Bit 0
Byte 0	Reserved							
Byte 1								
Byte 2								
Byte 3								
Byte 4	Baudrate Select							
Byte 5	Reserved							
Byte 6								
Byte 7								
Byte 8								
Byte 9	Input Holding Time(ms)							
Byte 10	Reserved							
Byte 11								
Byte 12								
Byte 13								
Byte 14	Input Filtering Time(ms)							
Byte 15								

Data description:

Baudrate Select: Values 1-3 can be selected, and changes to the baud rate require a reboot to take effect (default: 2).

1: COM1 (4.8kbps)

2: COM2 (38.4kbps)

3: COM3 (230.4kbps)

Input Holding Time(ms) : Input holding time (default: 0).

0: Disable

1: 200ms

2: 500ms

3: 1000ms

4: 1500ms

5: 2000ms

6: 3000ms

7: 5000ms

Input Filtering Time(ms): Input filtering time (default: 0).

7 Standard input submodule configuration definition

Configuration parameter								
Bit No.	Bit 7	Bit 6	Bit 5	Bit 4	Bit 3	Bit 2	Bit 1	Bit 0
Byte 0	Reserved						IQbehavior (Pin2)	

Data description:

IQbehavior: Pin2 configuration mode (default: 0).

0: IQ Not Support

1: DI

2: DO

8 Standard output submodule configuration definition

Configuration parameter								
Bit No.	Bit 7	Bit 6	Bit 5	Bit 4	Bit 3	Bit 2	Bit 1	Bit 0
Byte 0	Reserved						IQbehavior (Pin2)	
Byte 1	Reserved							Output Type (Pin4)
Byte 2	Reserved							
Byte 3								

Data description:

IQbehavior (Pin2) : Pin2 configuration mode (default: 0).

0: IQ Not Support

1: DI

2: DO

OutputType (Pin4): Output type (default: 1).

0: NPN

1: PNP

9 Event submodule configuration parameter definition

IO-Link port event source selection								
Bit No.	Bit 7	Bit 6	Bit 5	Bit 4	Bit 3	Bit 2	Bit 1	Bit 0
Byte 0	Event Source							

Data description:

Event Source: port event source selection (default: 1).

0: IO-Link Master Module, IO-Link master event.

1: IO-Link Device port_1, port 1 event.

2: IO-Link Device port_2, port 2 event.

3: IO-Link Device port_3, port 3 event.

4: IO-Link Device port_4, port 4 event.

5: IO-Link Device port_5, port 5 event.

6: IO-Link Device port_6, port 6 event.

7: IO-Link Device port_7, port 7 event.

8: IO-Link Device port_8, port 8 event.

5 Process Data Definition

1 IO-Link Master process data definition

Input data								
Bit No.	Bit 7	Bit 6	Bit 5	Bit 4	Bit 3	Bit 2	Bit 1	Bit 0
Byte 0	Std Data Port 8 Pin 2	Std Data Port 7 Pin 2	Std Data Port 6 Pin 2	Std Data Port 5 Pin 2	Std Data Port 4 Pin 2	Std Data Port 3 Pin 2	Std Data Port 2 Pin 2	Std Data Port 1 Pin 2
Byte 1	Std Data Port 8 Pin 4	Std Data Port 7 Pin 4	Std Data Port 6 Pin 4	Std Data Port 5 Pin 4	Std Data Port 4 Pin 4	Std Data Port 3 Pin 4	Std Data Port 2 Pin 4	Std Data Port 1 Pin 4

Data description:

Std Data Port x Pin 2: when the Pin2 is configured as input, the input value of Port x.

Std Data Port x Pin 4: when the Pin4 is configured as input, the input value of Port x.

Output data								
Bit No.	Bit 7	Bit 6	Bit 5	Bit 4	Bit 3	Bit 2	Bit 1	Bit 0
Byte 0	Std Data Port 8 Pin 2	Std Data Port 7 Pin 2	Std Data Port 6 Pin 2	Std Data Port 5 Pin 2	Std Data Port 4 Pin 2	Std Data Port 3 Pin 2	Std Data Port 2 Pin 2	Std Data Port 1 Pin 2
Byte 1	Std Data Port 8 Pin 4	Std Data Port 7 Pin 4	Std Data Port 6 Pin 4	Std Data Port 5 Pin 4	Std Data Port 4 Pin 4	Std Data Port 3 Pin 4	Std Data Port 2 Pin 4	Std Data Port 1 Pin 4

Data description:

Std Data Port x Pin 2: when the Pin2 is configured as output, the output value of Port x.

Std Data Port x Pin 4: when the Pin4 is configured as output, the output value of Port x.

2 IO-Link general submodule process data definition

Module name	Length of process data	Total length
IOL_I_01	Input 1 Byte, output 0 Byte	1 Byte
IOL_I_02	Input 2 Byte, output 0 Byte	2 Bytes
IOL_I_04	Input 4 Byte, output 0 Byte	4 Bytes

IOL_I_08	Input 8 Byte, output 0 Byte	8 Bytes
IOL_I_10	Input 10 Byte, output 0 Byte	10 Bytes
IOL_I_16	Input 16 Byte, output 0 Byte	16 Bytes
IOL_I_24	Input 24 Byte, output 0 Byte	24 Bytes
IOL_I_32	Input 32 Byte, output 0 Byte	32 Bytes
IOL_O_01	Input 0 Byte, output 1 Byte	1 Byte
IOL_O_02	Input 0 Byte, output 2 Byte	2 Bytes
IOL_O_04	Input 0 Byte, output 4 Byte	4 Bytes
IOL_O_08	Input 0 Byte, output 8 Byte	8 Bytes
IOL_O_10	Input 0 Byte, output 10 Byte	10 Bytes
IOL_O_16	Input 0 Byte, output 16 Byte	16 Bytes
IOL_O_24	Input 0 Byte, output 24 Byte	24 Bytes
IOL_O_32	Input 0 Byte, output 32 Byte	32 Bytes
IOL_I/O_01/01	Input 1 Byte, output 1 Byte	2 Bytes
IOL_I/O_02/02	Input 2 Byte, output 2 Byte	4 Bytes
IOL_I/O_02/04	Input 2 Byte, output 4 Byte	6 Bytes
IOL_I/O_02/08	Input 2 Byte, output 8 Byte	10 Bytes
IOL_I/O_04/02	Input 4 Byte, output 2 Byte	6 Bytes
IOL_I/O_04/04	Input 4 Byte, output 4 Byte	8 Bytes
IOL_I/O_04/08	Input 4 Byte, output 8 Byte	12 Bytes
IOL_I/O_04/16	Input 4 Byte, output 16 Byte	20 Bytes
IOL_I/O_04/32	Input 4 Byte, output 32 Byte	36 Bytes
IOL_I/O_08/02	Input 8 Byte, output 2 Byte	10 Bytes
IOL_I/O_08/04	Input 8 Byte, output 4 Byte	12 Bytes
IOL_I/O_08/08	Input 8 Byte, output 8 Byte	16 Bytes
IOL_I/O_10/10	Input 10 Byte, output 10 Byte	20 Bytes
IOL_I/O_16/04	Input 16 Byte, output 4 Byte	20 Bytes
IOL_I/O_16/16	Input 16 Byte, output 16 Byte	32 Bytes
IOL_I/O_32/04	Input 32 Byte, output 4 Byte	36 Bytes
IOL_I/O_32/32	Input 32 Byte, output 32 Byte	64 Bytes

3 IP-IA-16DIPDOP process data definition

Input data								
Bit No.	Bit 7	Bit 6	Bit 5	Bit 4	Bit 3	Bit 2	Bit 1	Bit 0

Byte 0	Input Data CH7	Input Data CH 6	Input Data CH 5	Input Data CH 4	Input Data CH 3	Input Data CH 2	Input Data CH 1	Input Data CH 0
Byte 1	Input Data CH 15	Input Data CH 14	Input Data CH 13	Input Data CH 12	Input Data CH 11	Input Data CH 10	Input Data CH 9	Input Data CH 8

Data description:

Input Data CH x: the input value of channel x.

Output data								
Bit No.	Bit 7	Bit 6	Bit 5	Bit 4	Bit 3	Bit 2	Bit 1	Bit 0
Byte 0	Output Data CH 7	Output Data CH 6	Output Data CH 5	Output Data CH 4	Output Data CH 3	Output Data CH 2	Output Data CH 1	Output Data CH 0
Byte 1	Output Data CH 15	Output Data CH 14	Output Data CH 13	Output Data CH 12	Output Data CH 11	Output Data CH 10	Output Data CH 9	Output Data CH 8

Data description:

Output Data CH x: the output value of channel x.

4 IP-IA-16DINDON process data definition

Input data								
Bit No.	Bit 7	Bit 6	Bit 5	Bit 4	Bit 3	Bit 2	Bit 1	Bit 0
Byte 0	Input Data CH 7	Input Data CH 6	Input Data CH 5	Input Data CH 4	Input Data CH 3	Input Data CH 2	Input Data CH 1	Input Data CH 0
Byte 1	Input Data CH 15	Input Data CH 14	Input Data CH 13	Input Data CH 12	Input Data CH 11	Input Data CH 10	Input Data CH 9	Input Data CH 8

Data description:

Input Data CHx: the input value of channel x.

Output data								
Bit No.	Bit 7	Bit 6	Bit 5	Bit 4	Bit 3	Bit 2	Bit 1	Bit 0
Byte 0	Output Data CH 7	Output Data CH 6	Output Data CH 5	Output Data CH 4	Output Data CH 3	Output Data CH 2	Output Data CH 1	Output Data CH 0
Byte 1	Output Data CH 15	Output Data CH 14	Output Data CH 13	Output Data CH 12	Output Data CH 11	Output Data CH 10	Output Data CH 9	Output Data CH 8

Data description:

Output Data CHx: the output value of channel x.

5 IP-IA-8DIP8DOP process data definition

Input data								
Bit No.	Bit 7	Bit 6	Bit 5	Bit 4	Bit 3	Bit 2	Bit 1	Bit 0
Byte 0	Input Data CH 7	Input Data CH 6	Input Data CH 5	Input Data CH 4	Input Data CH 3	Input Data CH 2	Input Data CH 1	Input Data CH 0

Data description:

Input Data CH x: the input value of channel x.

Output data								
Bit No.	Bit 7	Bit 6	Bit 5	Bit 4	Bit 3	Bit 2	Bit 1	Bit 0
Byte 0	Output Data CH 15	Output Data CH 14	Output Data CH 13	Output Data CH 12	Output Data CH 11	Output Data CH 10	Output Data CH 9	Output Data CH 8

Data description:

Output Data CH x: the output value of channel x.

6 IP-IA-8DIN8DON process data definition

Input data								
Bit No.	Bit 7	Bit 6	Bit 5	Bit 4	Bit 3	Bit 2	Bit 1	Bit 0
Byte 0	Input Data CH 7	Input Data CH 6	Input Data CH 5	Input Data CH 4	Input Data CH 3	Input Data CH 2	Input Data CH 1	Input Data CH 0

Data description:

Input Data CH x: the input value of channel x.

Output data								
Bit No.	Bit 7	Bit 6	Bit 5	Bit 4	Bit 3	Bit 2	Bit 1	Bit 0
Byte 0	Output Data CH 15	Output Data CH 14	Output Data CH 13	Output Data CH 12	Output Data CH 11	Output Data CH 10	Output Data CH 9	Output Data CH 8

Data description:

Output Data CH x: the output value of channel x.

7 IP-IA-16DIN process data definition

Input data								
Bit No.	Bit 7	Bit 6	Bit 5	Bit 4	Bit 3	Bit 2	Bit 1	Bit 0
Byte 0	Input Data CH 7	Input Data CH 6	Input Data CH 5	Input Data CH 4	Input Data CH 3	Input Data CH 2	Input Data CH 1	Input Data CH 0
Byte 1	Input Data CH 15	Input Data CH 14	Input Data CH 13	Input Data CH 12	Input Data CH 11	Input Data CH 10	Input Data CH 9	Input Data CH 8

Data description:

Input Data CH x: the input value of channel x.

8 IP-IA-16DIP process data definition

Input data								
Bit No.	Bit 7	Bit 6	Bit 5	Bit 4	Bit 3	Bit 2	Bit 1	Bit 0
Byte 0	Input Data CH 7	Input Data CH 6	Input Data CH 5	Input Data CH 4	Input Data CH 3	Input Data CH 2	Input Data CH 1	Input Data CH 0
Byte 1	Input Data CH 15	Input Data CH 14	Input Data CH 13	Input Data CH 12	Input Data CH 11	Input Data CH 10	Input Data CH 9	Input Data CH 8

Data description:

Input Data CH x: the input value of channel x.

9 IO-LINK ISDU functional submodule process data definition

Input data								
Bit No.	Bit 7	Bit 6	Bit 5	Bit 4	Bit 3	Bit 2	Bit 1	Bit 0
Byte 0	Operation ID							
Byte 1	ISDU RX Length							
Byte 2	ISDU Data 0							
……	……							
Byte 33	ISDU Data 31							

Data description:

Operation ID: Operation ID.

ISDU RX Length: Received data length up to 32 Bytes.

ISDU Data: ISDU data returned.

Output data								
Bit No.	Bit 7	Bit 6	Bit 5	Bit 4	Bit 3	Bit 2	Bit 1	Bit 0
Byte 0	ISDU Port							
Byte 1	ISDU index HexHigh							
Byte 2	ISDU index HexLow							
Byte 3	ISDU subindex							
Byte 4	ISDU Write length (Read Invalid)							
Byte 5	ISDU Write(0X01)/Read(0X00)							
Byte 6	Operation ID							
Byte 7	ISDU Data 0							
…….	……							
Byte 38	ISDU Data 31							

Data description:

ISDU Port: Operation ISDU port.

ISDU inde HexHigh: the ISDU index number high.

ISDU index HexLow: the ISDU index number low.

ISDU subindex: the ISDU subindex number.

ISDU Write length (Read Invalid): Write ISDU data length (invalid when read), up to 32 bytes.

ISDU Write(0X01)/Read(0X00): Operates the ISDU type, reads 0x00 writes 0x01.

Operation ID: The ISDU ID of this operation (the ID needs to be changed for each operation).

ISDU Data: Write ISDU data.

10 IO-Link event function submodule process data definition

IO-Link event 01/02/06/10/15 input data								
Bit No.	Bit 7	Bit 6	Bit 5	Bit 4	Bit 3	Bit 2	Bit 1	Bit 0
Byte 0	Event Type 0				Event Source 0			
Byte 1	Reserved							
Byte 2	Event Code 0							
Byte 3								
……	……							
Byte 4*n-3	Event buffer n							
Byte 4*n-2								
Byte 4*n-1								

Byte 4*n	

Data description:

Event Type 0: Event trigger type

1: indicates a message

2: indicates a warning

3: indicates an error

Event Source 0: event trigger port

Event Code 0: Event code

Note: An event of 4 bytes of data is composed of the above description, and the event codes supported by the master module can be described in the following table:

Event code	Description
0x1800	Abnormal port communication
0x1805	The chip temperature is too high
0x1807	The port is powered, overcurrent
0x1813	Port CQ overcurrent
0x180E	UA undervoltage
0x180F	UA overvoltage
0x180A	US undervoltage
0x180B	US overvoltage

IO-Link Event/01 outputs data								
Bit No.	Bit 7	Bit 6	Bit 5	Bit 4	Bit 3	Bit 2	Bit 1	Bit 0
Byte 0	Reserved						Clear Comm and Again (Rever sed)	Clear event 0

Data description:

Clear event0: Set 1 to clear event 0.

Clear Command Again (Reversed): The clear command again requires a reversal operation.

IO-Link Event/02 Output Data								
Bit No.	Bit 7	Bit 6	Bit 5	Bit 4	Bit 3	Bit 2	Bit 1	Bit 0

Byte 0	Reserved	Clear Comm and Again (Reversed)	Clear event 1	Clear event 0

Data description:

Clear event0: Set 1 to clear event 0.

Clear event1: Set 1 to clear event 1.

Clear Command Again (Reversed): The clear command again requires a reversal operation.

IO-Link Events/04 Output Data								
Bit No.	Bit 7	Bit 6	Bit 5	Bit 4	Bit 3	Bit 2	Bit 1	Bit 0
Byte 0	Reserved			Clear Comm and Again (Reversed)	Clear event 3	Clear event 2	Clear event 1	Clear event 0

Data description:

Clear event0: Set 1 to clear event 0.

Clear event1: Set 1 to clear event 1.

Clear event2: Set 1 to clear event 2.

Clear event3: Set 1 to clear event 3.

Clear Command Again (Reversed): The Clear command again requires a reversal operation (default: 0).

IO-Link Events/06 Output Data								
Bit No.	Bit 7	Bit 6	Bit 5	Bit 4	Bit 3	Bit 2	Bit 1	Bit 0
Byte 0	Reserved	Clear Comm and Again (Reversed)	Clear event 5	Clear event 4	Clear event 3	Clear event 2	Clear event 1	Clear event 0

Data description:

Clear event0: Set 1 to clear event 0.

Clear event1: Set 1 to clear event 1.

Clear event2: Set 1 to clear event 2.

Clear event3: Set 1 to clear event 3.

Clear event4: Set 1 to clear event 4.

Clear event5: Set 1 to clear event 5.

Clear Command Again (Reversed): Clearing the command again requires a reversal operation.

IO-Link Events/10 Output Data								
Bit No.	Bit 7	Bit 6	Bit 5	Bit 4	Bit 3	Bit 2	Bit 1	Bit 0
Byte 0	Clear event 7	Clear event 6	Clear event 5	Clear event 4	Clear event 3	Clear event 2	Clear event 1	Clear event 0
Byte 1	Reserved					Clear Command Again (Reversed)	Clear event 9	Clear event 8

Data description:

Clear event0: Set 1 to clear event 0.

Clear event1: Set 1 to clear event 1.

Clear event2: Set 1 to clear event 2.

Clear event3: Set 1 to clear event 3.

Clear event4: Set 1 to clear event 4.

Clear event5: Set 1 to clear event 5.

Clear event6: Set 1 to clear event 6.

Clear event7: Set 1 to clear event 7.

Clear event8: Set 1 to clear event 8.

Clear event9: Set 1 to clear event 9.

Clear Command Again (Reversed): The clear command again requires a reversal operation.

IO-Link Events/15 Output Data								
Bit No.	Bit 7	Bit 6	Bit 5	Bit 4	Bit 3	Bit 2	Bit 1	Bit 0
Byte 0	Clear event 7	Clear event 6	Clear event 5	Clear event 4	Clear event 3	Clear event 2	Clear event 1	Clear event 0
Byte 1	Clear Command Again (Reversed)	Clear event 14	Clear event 13	Clear event 12	Clear event 11	Clear event 10	Clear event 9	Clear event 8

Data description:

Clear event0: Set 1 to clear event 0.

Clear event1: Set 1 to clear event 1.

Clear event2: Set 1 to clear event 2.

Clear event3: Set 1 to clear event 3.

Clear event4: Set 1 to clear event 4.

Clear event5: Set 1 to clear event 5.

Clear event6: Set 1 to clear event 6.

Clear event7: Set 1 to clear event 7.

Clear event8: Set 1 to clear event 8.

Clear event9: Set 1 to clear event 9.

Clear event10: Set 1 to clear event 10.

Clear event11: Set 1 to clear event 11.

Clear event12: Set 1 to clear event 12.

Clear event13: Set 1 to clear event 13.

Clear event14: Set 1 to clear event 14.

Clear Command Again (Reversed): The clear command again requires a reversal operation.

11 Functional submodule - Com ERR process data definition

Input data								
Bit No.	Bit 7	Bit 6	Bit 5	Bit 4	Bit 3	Bit 2	Bit 1	Bit 0

Byte 0	ComErr Data Port 8	ComErr Data Port 7	ComErr Data Port 6	ComErr Data Port 5	ComErr Data Port 4	ComErr Data Port 3	ComErr Data Port 2	ComErr Data Port 1

Data description:

ComErr Data Port x: Port x Communication Status.

0: Port communication is normal

1: Abnormal port communication

12 The function submodule PD Valid process data definition

Input data								
Bit No.	Bit 7	Bit 6	Bit 5	Bit 4	Bit 3	Bit 2	Bit 1	Bit 0
Byte 0	PD Valid Data Port 8	PD Valid Data Port 7	PD Valid Data Port 6	PD Valid Data Port 5	PD Valid Data Port 4	PD Valid Data Port 3	PD Valid Data Port 2	PD Valid Data Port 1

Data description:

PD Valid Data Port x: Port x input process data is valid.

0: Invalid port input data

1: Port input data is valid

13 Function submodule Port Event Flag process data definition

Input data								
Bit No.	Bit 7	Bit 6	Bit 5	Bit 4	Bit 3	Bit 2	Bit 1	Bit 0
Byte 0	Event State Port 8	Event State Port 7	Event State Port 6	Event State Port 5	Event State Port 4	Event State Port 3	Event State Port 2	Event State Port 1

Data description:

Event State Port x: Event exists on port x.

0: No events on the port

1: Port Presence Event

6 Dimension

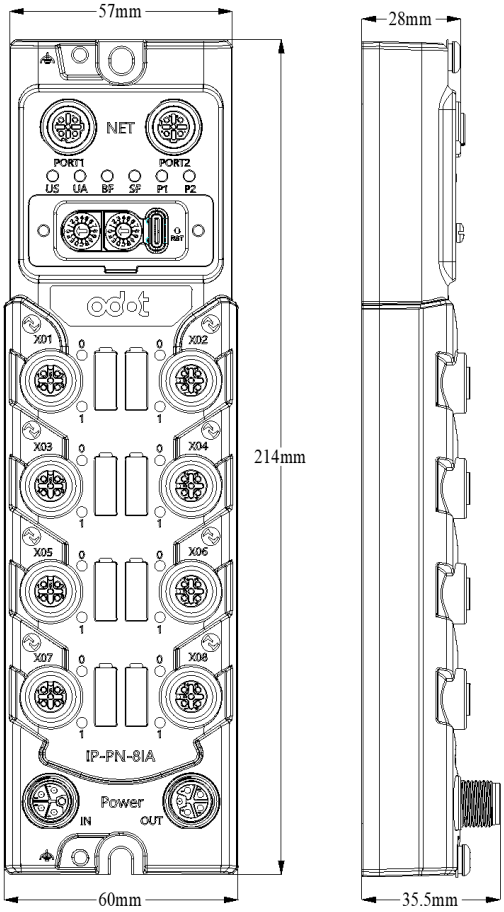
57mm
28mm
NET
PORT1
PORT2
US UA BF SF P1 P2
X01
X02
X03
X04
X05
X06
X07
X08
214mm
IP-PN-8IA
Power
IN
OUT
60mm
35.5mm

IP-PN-8IA PROFINET Slave & 8 Channels IO-Link Master Module/Up to 16 Digital Input or Output Configurable

1 Module Features

- PROFINET seamlessly integrates with standard PROFINET IO Device protocols, and the module does not support MRP media redundancy or ring network redundancy. RT real-time communication mode is supported, and the minimum period of RT real-time communication is 1ms. The adapter supports a maximum input of 1440 bytes and a maximum output of 1440 bytes, and can be directly connected to industrial Ethernet for high-speed communication with PLCs and other devices to ensure real-time system performance and stability.
- Supports IO-Link V1.1.4 standard, 8 Class A ports, each port can independently configure Pin 2/Pin 4 input and output, up to 16 digital input or output channels can be configured.
- IP67 protection level: It has excellent dustproof and waterproof performance, and can operate stably in harsh industrial environments such as moisture, dust, and oil stains without additional protective measures.
- Module diagnosis: It has functions such as power supply undervoltage/ overvoltage detection and communication status diagnosis.
- Temperature protection: built-in temperature sensor, real-time monitoring of the module's operating temperature, automatic alarm and protective measures for exceeding the threshold, extending the module's service life.
- Plug and play: Supports automatic device identification and parameter configuration, simplifying the installation and commissioning process and lowering the threshold for user use.
- Online upgrade: If firmware upgrade is required, online upgrade can be achieved without disassembly.

2 Technical Parameter

Power Port	
Us Power Supply Rated Voltage	24VDC
Us Power Supply Current	Max.8A
Ua Power Supply Rated Voltage	24VDC
Ua Power Supply Current	Max.8A
Us/Ua Power Interface Type	2 M12: L-code 5 Pins, 1 pin end (input) and 1 hole end (output)
Pin Definition	M12 pin end (input) / hole end (output): Pin1: Us+, system power Pin2: Ua-, field power Pin3: Us-, system power Pin4: Ua+, field power Pin5: FG, functional grounding
Module Consumption	Max.200mA@24VDC
Network Port	
Number of Network	2 M12, D-code 4 Pin, hole end, 1 IN, 1 OUT
Pin Definition	Pin1: Sender Tx+ Pin2: Receiver Rx+ Pin3: Sender Tx- Pin4: Receiver Rx-
IO-Link Class-A Port	
Quantity	8 M12, A-code 5 Pin, hole end
Port Definition	Pin1: 24VDC (Us+), positive power supply Pin2: I/Q, DI/DO configurable Pin3: GND(Us-), negative power supply Pin4: C/Q, IO-Link/DI/DO configurable Pin5: NC, unused
Output Power Supply Current	(1) Pin1(Us+)/Pin3(Us-): Rated output current 1.6A (2) Pin2(Us+)/Pin3(Us-): Rated output current 2A
Communication Protocol	
Protocol	PROFINET IO Device
Fieldbus Bytes	Input: Max.1440 Bytes Output: Max.1440 Bytes
RT	Support, the minimum period of RT communication is 1ms.
IRT	Not supported
MRP	Not supported
MRPD	Not supported
IO-Link Communication Protocol	
Protocol Standard	IO-Link V1.1 master protocol
Process Data	Each port input: Max.32 Bytes Each module input: Max.8×32 Bytes (8*Port) Each port output: Max.32 Bytes Each module output: Max.8×32 Bytes (8*Port)

Transfer Rate	COM1(4.8kbps), COM2(38.4kbps), COM3(230.4kbps), adaptive transfer rate is supported
IO-Link Maximum Line Length	Point-to-point 20 meters
Dimension	
Dimension	214 mm *60 mm *35.5 mm

3 Hardware Interface

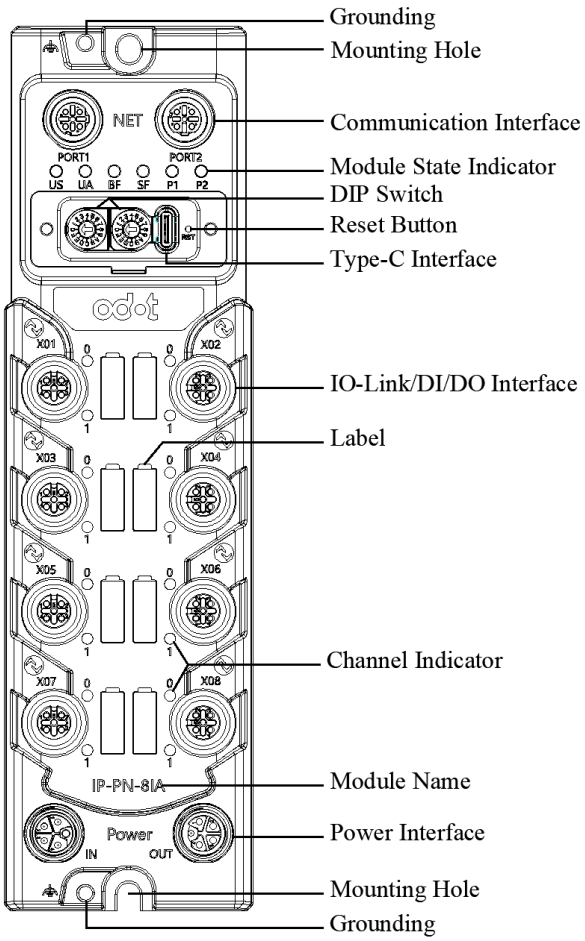

3.1 LED Indicator Definition

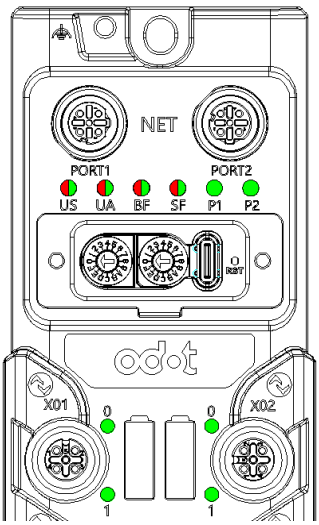

Us Power indicator (Red/ Green)	Description
ON (Green)	Us Power supply is normal
ON (Red)	Us Power supply overvoltage (30 V DC~36 V DC)
Flash (Red)	Us Power supply undervoltage (9VDC~18VDC)
OFF	The module is not powered or the supply voltage is less than 9VDC
Ua Power indicator (Red/ Green)	Description
ON (Green)	Ua Power supply is normal
ON (Red)	Ua Power supply overvoltage (30 V DC~36 V DC)
Flash (Red)	Ua Power supply undervoltage (9VDC~18VDC)
SF Network running indicator (Red/Green)	Description
OFF	Operation normal
Flash (Red)	TIA lighting test
Fast flash (Red)	Internal communication is abnormal
Flash 4 times (Green)	IO Config lighting test
BF Running error indicator (Red/Green)	Description
ON (Red)	Port1 and Port2 Link Down
Flash (Red)	The device is offline
OFF	The device is online
P1/P2network status indicator (Green)	Description
ON	The network connection is successful
Flash	There is data transfer
OFF	Network connection failed
Pin2 Indicator (Green/Top)	Description
ON	Pin2 Input/Output State 1
OFF	Pin2 Input/Output/Unconfigured State 0

Pin4 Indicator (Green/Bottom)	Description
ON	Pin4 IO-Link mode communicates normal/SIO mode input/output state 1
OFF	Pin4 IO-Link mode is not connected to /SIO mode input/output state 0
Flash	Abnormal connection of Pin4 IO-Link communication (disconnected or abnormal after connection)

3.2 Communication Configuration Interface

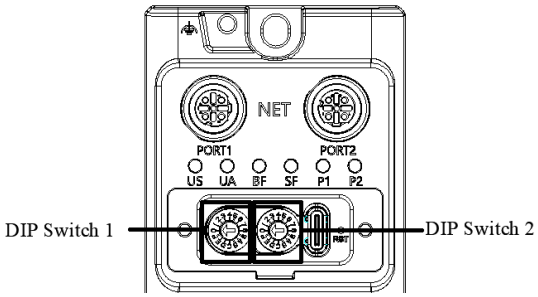

The DIP switch is used to set the PROFINET device name (default IP-PN-8IA-Addr).

The device name is the default value when the DIP switch value is 0, or the device name can be set online using the PROFINET monitor.

When the DIP switch value is not 0, the device name is determined by the rotary switch, and the corresponding relationship table is as follows:

DIP switch 1	DIP switch 2	Dial value	Device name
0H	0H	00H	Default value or software configuration
0H	1H	01H	IP-PN-8IA -1
0H	…	…	…
0H	FH	0FH	IP-PN-8IA -15
1H	0H	10H	IP-PN-8IA -16
1H	1H	11H	IP-PN-8IA -17
1H	…	…	…
1H	FH	1FH	IP-PN-8IA -31
…	…	…	…
FH	FH	FFH	IP-PN-8IA -255

Type-C interface: Used to configure device parameters and firmware upgrades.

RST: Reset button, press and hold the button for more than 5 seconds, and all module parameters will return to their default values.

Note: If need to use the PROFINET monitor to assign device names for communication, keep the DIP switch value to 0, and if the DIP switch value is not 0, there may be a conflict between the assignment address and the DIP address.

3.3 Port Definition

Power input port definition

Port Schematic Diagram	Pin	Mark	Description
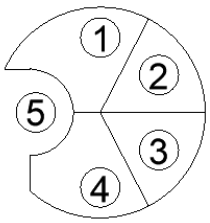	1	Us+	System power positive
	2	Ua-	Field power negative
	3	Us-	System power negative
	4	Ua+	Field power positive
	5	FG	Functional grounding

Power output port definition

Port Schematic Diagram	Pin	Mark	Description
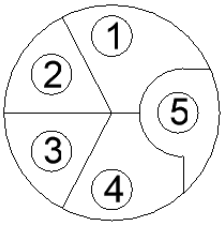	1	Us+	System power positive
	2	Ua-	Field power negative
	3	Us-	System power negative
	4	Ua+	Field power positive
	5	FG	Functional grounding

PROFINET Pin definition

Port Schematic Diagram	Pin	Mark	Description
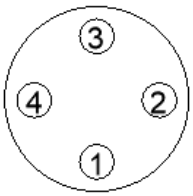	1	Tx+	Send +
	2	Rx+	Receive +
	3	Tx-	Send -
	4	Rx-	Receive -

IO-Link port definition (X01~X08)

Port Schematic Diagram	Pin	Mark	Description
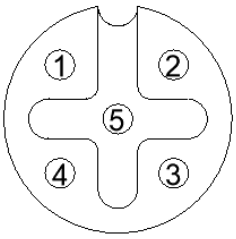	1	24VDC	+24VDC power supply (Us+)
	2	I/Q	Digital input or output, configurable
	3	GND	GND（Us-）
	4	C/Q	IO-Link mode or digital input or digital output, configurable
	5	NC	Unused

3.4 Wirring

1. IO-Link Device

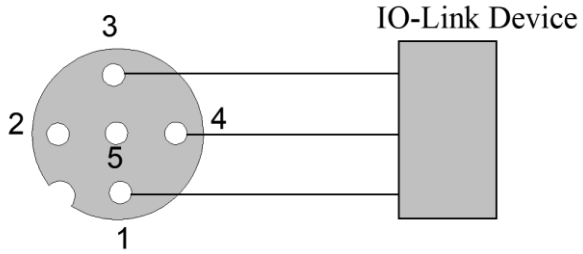

2. DI Device –High level input /PNP (Pin2 & Pin4)

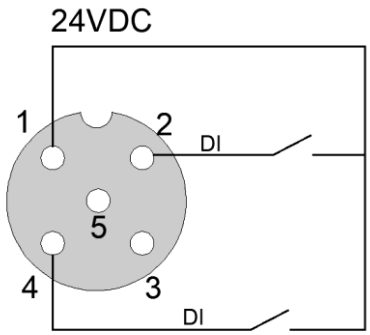

3. DO Device –High level output /PNP (Pin2 & Pin4)

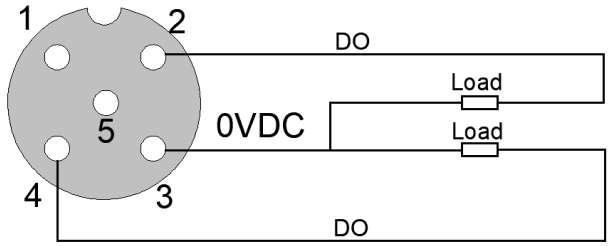

4. DO Device–Low level output /NPN (Pin4)

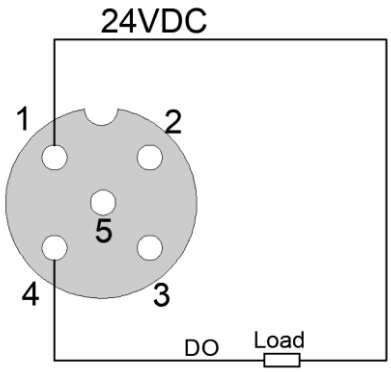

4 Configuration Parameter Definition

1 PN slave configuration parameter definition

Adapter configuration parameters								
Bit No.	Bit 7	Bit 6	Bit 5	Bit 4	Bit 3	Bit 2	Bit 1	Bit 0
Byte 0	Reserved						Fault Action for Input	Reserved
Communication configuration parameters								
Byte 1	Mac Address							
Byte 2								
Byte 3								
Byte 4								
Byte 5								
Byte 6								
Byte 7	IP Address							
Byte 8								
Byte 9								
Byte 10								
Byte 11	Net Mask							
Byte 12								
Byte 13								
Byte 14								
Byte 15	Net Gateway							
Byte 16								
Byte 17								
Byte 18								
Byte 19	PROFINET Device Name							
……								
Byte 82								
Byte 83	Reserved							
……								
Byte 114								

Data description:

Fault Action for Input: Input fault handling method, when the IO module is offline, the adapter processes the input data of the IO module in this mode. (Default: 0).

0: Hold last input value

1: Cleaning input value

MAC Address: MAC address, read-only attribute.

IP Address: IP address, read-only attribute.

Net Mask: Subnet mask, read-only attributes.

Net Gateway: Gateway address, read-only attribute.

PROFINET Device Name: PROFINET device name, read-only attribute.

2 IO-Link master configuration parameter definition

IO-Link master security status configuration parameters								
Bit No.	Bit 7	Bit 6	Bit 5	Bit 4	Bit 3	Bit 2	Bit 1	Bit 0
Byte 0	Safe State Port 4 Pin 2		Safe State Port 3 Pin 2		Safe State Port 2 Pin 2		Safe State Port 1 Pin 2	
Byte 1	Safe State Port 8 Pin 2		Safe State Port 7 Pin 2		Safe State Port 6 Pin 2		Safe State Port 5 Pin 2	
Byte 2	Safe State Port 4 Pin 4		Safe State Port 3 Pin 4		Safe State Port 2 Pin 4		Safe State Port 1 Pin 4	
Byte 3	Safe State Port 8 Pin 4		Safe State Port 7 Pin 4		Safe State Port 6 Pin 4		Safe State Port 5 Pin 4	
Input filtering configuration parameters								
Byte 4	Pin2 Input Filtering Time (ms)							
Byte 5								
Byte 6	Pin2 Input Holding Time (ms)							
Byte 7	Pin4 Input Filtering Time (ms)							
Byte 8								
Byte 9	Pin4 Input Holding Time (ms)							
Byte 10	Reserved							

Data description:

Safe State Port (1~8) Pin 2: Port 1~8, output value when Pin2 fails (default value: 0).

0: output 0

1: Output 1

2: Hold last value

Safe State Port (1~8) Pin 4: Port 1~8, output value when Pin4 fails (default value: 0).

0: output 0

1: Output 1

2: Hold last value

Pin2 Input Filtering Time (ms): Pin2 input filter time (default: 10ms).

Pin2 Input Holding Time (ms): Pin2 input holding time (default: 0).

0: Disable

1: 200ms

2: 500ms

3: 1000ms

4: 1500ms

5: 2000ms

6: 3000ms

7: 5000ms

Pin4 Input Filtering Time (ms): SIO mode Pin4 input filter time (default: 10ms).

Pin4 Input Holding Time (ms): SIO mode Pin4 input holding time (default: 0).

0: Disable

1: 200ms

2: 500ms

3: 1000ms

4: 1500ms

5: 2000ms

6: 3000ms

7: 5000ms

3 IO-Link Common Submodule Configuration Parameter Definition

Port configuration parameters								
Bit No.	Bit 7	Bit 6	Bit 5	Bit 4	Bit 3	Bit 2	Bit 1	Bit 0
Byte 0	Port Mode							
Byte 1	Validation							
Byte 2	IQbehavior (Pin2)							
Byte 3	Cycle time							
Byte 4	Vendor ID							
Byte 5								
Byte 6	Device ID							
Byte 7								
Byte 8								
Configuration parameter reset								
Byte 9	Reset to factory defaults							
Write ISDU configuration parameters								
Byte 10	ISDU Index							
Byte 11								

Byte 12	ISDU Subindex
Byte 13	ISDU Length
Byte 14	ISDU Parameter 0
Byte 15	ISDU Parameter 1
Byte 16	ISDU Parameter 2
Byte 17	ISDU Parameter 3
Byte 18	ISDU Parameter 4
Byte 19	ISDU Parameter 5
Byte 20	ISDU Parameter 6
Byte 21	ISDU Parameter 7
Byte 22	ISDU Parameter 8
Byte 23	ISDU Parameter 9
Byte 24	ISDU Parameter 10
Byte 25	ISDU Parameter 11
Byte 26	ISDU Parameter 12
Byte 27	ISDU Parameter 13
Byte 28	ISDU Parameter 14
Byte 29	ISDU Parameter 15
Byte 30	ISDU Parameter 16
Byte 31	ISDU Parameter 17
Byte 32	ISDU Parameter 18
Byte 33	ISDU Parameter 19
Byte 34	ISDU Parameter 20
Byte 35	ISDU Parameter 21
Byte 36	ISDU Parameter 22
Byte 37	ISDU Parameter 23
Byte 38	ISDU Parameter 24
Byte 39	ISDU Parameter 25
Byte 40	ISDU Parameter 26
Byte 41	ISDU Parameter 27
Byte 42	ISDU Parameter 28
Byte 43	ISDU Parameter 29
Byte 44	ISDU Parameter 30
Byte 45	ISDU Parameter 31
Write ISDU configuration parameter 1	
36 Bytes	
Write ISDU configuration parameters…	
36 Bytes	

Data description:

Port Mode: IO-Link port mode configuration (default: 1).

0: Manual

1: AutoStart

Validation: checksum backup (default: 0).

0: NO Device Check

1: DS Disable

2: Backup/Restore

3: Restore

IQbehavior (Pin2): Configure Pin2 mode (default: 0).

0: Not Support

1: Digital Input

2: Digital Output

Cycle time: The desired cycle time, this parameter is set when the equipment needs strict cycle time requirements, normal use can be set to 0, the range is 0~132.8ms (default value: 0).

Vendor ID: Vendor ID number.

Device ID: Device ID number.

Reset to factory defaults: Restore the configuration parameters to factory settings (default value: 0).

0: Not Reset

1: Reset (Need to manually switch back to Not Reset after reset)

ISDU Index: Write the ISDU index number (high bit first, low bit last).

ISDU Subindex: Write the ISDU subindex number.

ISDU Length: Write ISDU data length, up to 32 bytes.

ISDU Data: Write ISDU data.

4 IP-IA-8DIP8DOP/IP-IA-8DIN8DON Configuration parameter definition

Configuration definition								
Bit No.	Bit 7	Bit 6	Bit 5	Bit 4	Bit 3	Bit 2	Bit 1	Bit 0
Byte 0	Reserved							
Byte 1								
Byte 2								
Byte 3								
Byte 4	Baudrate Select							

Byte 5	Reserved							
Byte 6								
Byte 7								
Byte 8								
Byte 9	Input Holding Time (ms)							
Byte 10	Reserved							
Byte 11								
Byte 12								
Byte 13								
Byte 14	Input Filtering Time (ms)							
Byte 15								
Byte 16	Reserved							
Byte 17								
Byte 18								
Byte 19								
Byte 20	CH15 Fault Output Configuration	CH14 Fault Output Configuration	CH13 Fault Output Configuration	CH12 Fault Output Configuration	CH11 Fault Output Configuration	CH10 Fault Output Configuration	CH9 Fault Output Configuration	CH8 Fault Output Configuration
Byte 21	Reserved							
Byte 22								
Byte 23								
Byte 24								
Byte 25	CH15 Fault Output Value Configuration	CH14 Fault Output Value Configuration	CH13 Fault Output Value Configuration	CH12 Fault Output Value Configuration	CH11 Fault Output Value Configuration	CH10 Fault Output Value Configuration	CH9 Fault Output Value Configuration	CH8 Fault Output Value Configuration

Data description:

Baudrate Select: Values 1-3 can be selected, and changes to the baud rate require a restart to take effect (default value: 2).

1: COM1 (4.8kbps)

2: COM2 (38.4kbps)

3: COM3 (230.4kbps)

Input Holding Time(ms): the input holding time (default: 0).

0: Disable

1: 200ms

2: 500ms

3: 1000ms

4: 1500ms

5: 2000ms

6: 3000ms

7: 5000ms

Input Filtering Time(ms): the input filtering time (default: 0).

CHx Fault output configuration: Channel x fault output enabled (default: 0).

0: Hold last output value

1: Output fault value

CHx Fault output value configuration: Channel x fault output value (default: 0).

0: Output 0

1: Output 1

5 IP-IA-16DIPDOP/IP-IA-16DINDON Configuration parameter definition

Configuration parameter								
Bit No.	Bit 7	Bit 6	Bit 5	Bit 4	Bit 3	Bit 2	Bit 1	Bit 0
Byte 0	Reserved							
Byte 1								
Byte 2								
Byte 3								
Byte 4	Baudrate Select							
Byte 5	Reserved							
Byte 6								
Byte 7								
Byte 8								
Byte 9	CH7 Configure input or output	CH6 Configure input or output	CH5 Configure input or output	CH4 Configure input or output	CH3 Configure input or output	CH2 Configure input or output	CH1 Configure input or output	CH0 Configure input or output
Byte 10	CH15 Configure input or output	CH14 Configure input or output	CH13 Configure input or output	CH12 Configure input or output	CH11 Configure input or output	CH10 Configure input or output	CH9 Configure input or output	CH8 Configure input or output
Byte 11	Reserved							
Byte 12								
Byte 13								
Byte 14								

Byte 15	Input Holding Time(ms)							
Byte 16	Reserved							
Byte 17								
Byte 18								
Byte 19								
Byte 20	Input Filtering Time (ms)							
Byte 21								
Byte 22								
Byte 23	Reserved							
Byte 24								
Byte 25								
Byte 26								
Byte 27	CH7 Fault Output Configuration	CH6 Fault Output Configuration	CH5 Fault Output Configuration	CH4 Fault Output Configuration	CH3 Fault Output Configuration	CH2 Fault Output Configuration	CH1 Fault Output Configuration	CH0 Fault Output Configuration
Byte 28	CH15 Fault Output Configuration	CH14 Fault Output Configuration	CH13 Fault Output Configuration	CH12 Fault Output Configuration	CH11 Fault Output Configuration	CH10 Fault Output Configuration	CH9 Fault Output Configuration	CH8 Fault Output Configuration
Byte 29	Reserved							
Byte 30								
Byte 31								
Byte 32								
Byte 33	CH7 Fault Output Value Configuration	CH6 Fault Output Value Configuration	CH5 Fault Output Value Configuration	CH4 Fault Output Value Configuration	CH3 Fault Output Value Configuration	CH2 Fault Output Value Configuration	CH1 Fault Output Value Configuration	CH0 Fault Output Value Configuration
Byte 34	CH16 Fault Output Value Configuration	CH15 Fault Output Value Configuration	CH14 Fault Output Value Configuration	CH13 Fault Output Value Configuration	CH12 Fault Output Value Configuration	CH11 Fault Output Value Configuration	CH10 Fault Output Value Configuration	CH8 Fault Output Value Configuration

Data description:

Baudrate Select: Values 1-3 can be selected, and changes to the baud rate require a reboot to take effect (default: 2).

1: COM1 (4.8kbps)

2: COM2 (38.4kbps)

3: COM3 (230.4kbps)

CHx Configure input or output: Channel x function configuration (default: 1).

0: Digital input

1: Digital output

Input Holding Time(ms): Input holding time (default: 0).

0: Disable

1: 200ms

2: 500ms

3: 1000ms

4: 1500ms

5: 2000ms

6: 3000ms

7: 5000ms

Input Filtering Time(ms): Input filtering time (default: 0).

CHx Fault output configuration: Channel x fault output (default: 0).

0: Hold last output value

1: Output fault value

CHx Fault output value configuration: Channel x fault output value (default: 0).

0: Output 0

1: Output 1

6 IP-IA-16DIP/IP-IA-16DIN Configuration parameter definition

Configuration parameter								
Bit No.	Bit 7	Bit 6	Bit 5	Bit 4	Bit 3	Bit 2	Bit 1	Bit 0
Byte 0	Reserved							
Byte 1								
Byte 2								
Byte 3								
Byte 4	Baudrate Select							
Byte 5	Reserved							
Byte 6								
Byte 7								
Byte 8								

Byte 9	Input Holding Time(ms)
Byte 10	Reserved
Byte 11	
Byte 12	
Byte 13	
Byte 14	Input Filtering Time(ms)
Byte 15	

Data description:

Baudrate Select: Values 1-3 can be selected, and changes to the baud rate require a reboot to take effect (default: 2).

1: COM1 (4.8kbps)

2: COM2 (38.4kbps)

3: COM3 (230.4kbps)

Input Holding Time(ms) : Input holding time (default: 0).

0: Disable

1: 200ms

2: 500ms

3: 1000ms

4: 1500ms

5: 2000ms

6: 3000ms

7: 5000ms

Input Filtering Time(ms): Input filtering time (default: 0).

7 Standard input submodule configuration definition

Configuration parameter								
Bit No.	Bit 7	Bit 6	Bit 5	Bit 4	Bit 3	Bit 2	Bit 1	Bit 0
Byte 0	Reserved						IQbehavior (Pin2)	

Data description:

IQbehavior: Pin2 configuration mode (default: 0).

0: IQ Not Support

1: DI

2: DO

8 Standard output submodule configuration definition

Configuration parameter								
Bit No.	Bit 7	Bit 6	Bit 5	Bit 4	Bit 3	Bit 2	Bit 1	Bit 0
Byte 0	Reserved						IQbehavior (Pin2)	
Byte 1	Reserved							Output Type (Pin4)
Byte 2	Reserved							
Byte 3								

Data description:

IQbehavior (Pin2) : Pin2 configuration mode (default: 0).

0: IQ Not Support

1: DI

2: DO

OutputType (Pin4): Output type (default: 1).

0: NPN

1: PNP

9 Event submodule configuration parameter definition

IO-Link port event source selection								
Bit No.	Bit 7	Bit 6	Bit 5	Bit 4	Bit 3	Bit 2	Bit 1	Bit 0
Byte 0	Event Source							

Data description:

Event Source: port event source selection (default: 1).

0: IO-Link Master Module, IO-Link master event.

1: IO-Link Device port_1, port 1 event.

2: IO-Link Device port_2, port 2 event.

3: IO-Link Device port_3, port 3 event.

4: IO-Link Device port_4, port 4 event.

5: IO-Link Device port_5, port 5 event.

6: IO-Link Device port_6, port 6 event.

7: IO-Link Device port_7, port 7 event.

8: IO-Link Device port_8, port 8 event.

5 Process Data Definition

1 IO-Link Master process data definition

Input data								
Bit No.	Bit 7	Bit 6	Bit 5	Bit 4	Bit 3	Bit 2	Bit 1	Bit 0
Byte 0	Std Data Port 8 Pin 2	Std Data Port 7 Pin 2	Std Data Port 6 Pin 2	Std Data Port 5 Pin 2	Std Data Port 4 Pin 2	Std Data Port 3 Pin 2	Std Data Port 2 Pin 2	Std Data Port 1 Pin 2
Byte 1	Std Data Port 8 Pin 4	Std Data Port 7 Pin 4	Std Data Port 6 Pin 4	Std Data Port 5 Pin 4	Std Data Port 4 Pin 4	Std Data Port 3 Pin 4	Std Data Port 2 Pin 4	Std Data Port 1 Pin 4

Data description:

Std Data Port x Pin 2: when the Pin2 is configured as input, the input value of Port x.

Std Data Port x Pin 4: when the Pin4 is configured as input, the input value of Port x.

Output data								
Bit No.	Bit 7	Bit 6	Bit 5	Bit 4	Bit 3	Bit 2	Bit 1	Bit 0
Byte 0	Std Data Port 8 Pin 2	Std Data Port 7 Pin 2	Std Data Port 6 Pin 2	Std Data Port 5 Pin 2	Std Data Port 4 Pin 2	Std Data Port 3 Pin 2	Std Data Port 2 Pin 2	Std Data Port 1 Pin 2
Byte 1	Std Data Port 8 Pin 4	Std Data Port 7 Pin 4	Std Data Port 6 Pin 4	Std Data Port 5 Pin 4	Std Data Port 4 Pin 4	Std Data Port 3 Pin 4	Std Data Port 2 Pin 4	Std Data Port 1 Pin 4

Data description:

Std Data Port x Pin 2: when the Pin2 is configured as output, the output value of Port x.

Std Data Port x Pin 4: when the Pin4 is configured as output, the output value of Port x.

2 IO-Link general submodule process data definition

Module name	Length of process data	Total length
IOL_I_01	Input 1 Byte, output 0 Byte	1 Byte
IOL_I_02	Input 2 Byte, output 0 Byte	2 Bytes
IOL_I_04	Input 4 Byte, output 0 Byte	4 Bytes

IOL_I_08	Input 8 Byte, output 0 Byte	8 Bytes
IOL_I_10	Input 10 Byte, output 0 Byte	10 Bytes
IOL_I_16	Input 16 Byte, output 0 Byte	16 Bytes
IOL_I_24	Input 24 Byte, output 0 Byte	24 Bytes
IOL_I_32	Input 32 Byte, output 0 Byte	32 Bytes
IOL_O_01	Input 0 Byte, output 1 Byte	1 Byte
IOL_O_02	Input 0 Byte, output 2 Byte	2 Bytes
IOL_O_04	Input 0 Byte, output 4 Byte	4 Bytes
IOL_O_08	Input 0 Byte, output 8 Byte	8 Bytes
IOL_O_10	Input 0 Byte, output 10 Byte	10 Bytes
IOL_O_16	Input 0 Byte, output 16 Byte	16 Bytes
IOL_O_24	Input 0 Byte, output 24 Byte	24 Bytes
IOL_O_32	Input 0 Byte, output 32 Byte	32 Bytes
IOL_I/O_01/01	Input 1 Byte, output 1 Byte	2 Bytes
IOL_I/O_02/02	Input 2 Byte, output 2 Byte	4 Bytes
IOL_I/O_02/04	Input 2 Byte, output 4 Byte	6 Bytes
IOL_I/O_02/08	Input 2 Byte, output 8 Byte	10 Bytes
IOL_I/O_04/02	Input 4 Byte, output 2 Byte	6 Bytes
IOL_I/O_04/04	Input 4 Byte, output 4 Byte	8 Bytes
IOL_I/O_04/08	Input 4 Byte, output 8 Byte	12 Bytes
IOL_I/O_04/16	Input 4 Byte, output 16 Byte	20 Bytes
IOL_I/O_04/32	Input 4 Byte, output 32 Byte	36 Bytes
IOL_I/O_08/02	Input 8 Byte, output 2 Byte	10 Bytes
IOL_I/O_08/04	Input 8 Byte, output 4 Byte	12 Bytes
IOL_I/O_08/08	Input 8 Byte, output 8 Byte	16 Bytes
IOL_I/O_10/10	Input 10 Byte, output 10 Byte	20 Bytes
IOL_I/O_16/04	Input 16 Byte, output 4 Byte	20 Bytes
IOL_I/O_16/16	Input 16 Byte, output 16 Byte	32 Bytes
IOL_I/O_32/04	Input 32 Byte, output 4 Byte	36 Bytes
IOL_I/O_32/32	Input 32 Byte, output 32 Byte	64 Bytes

3 IP-IA-16DIPDOP process data definition

Input data								
Bit No.	Bit 7	Bit 6	Bit 5	Bit 4	Bit 3	Bit 2	Bit 1	Bit 0

Byte 0	Input Data CH7	Input Data CH 6	Input Data CH 5	Input Data CH 4	Input Data CH 3	Input Data CH 2	Input Data CH 1	Input Data CH 0
Byte 1	Input Data CH 15	Input Data CH 14	Input Data CH 13	Input Data CH 12	Input Data CH 11	Input Data CH 10	Input Data CH 9	Input Data CH 8

Data description:

Input Data CH x: the input value of channel x.

Output data								
Bit No.	Bit 7	Bit 6	Bit 5	Bit 4	Bit 3	Bit 2	Bit 1	Bit 0
Byte 0	Output Data CH 7	Output Data CH 6	Output Data CH 5	Output Data CH 4	Output Data CH 3	Output Data CH 2	Output Data CH 1	Output Data CH 0
Byte 1	Output Data CH 15	Output Data CH 14	Output Data CH 13	Output Data CH 12	Output Data CH 11	Output Data CH 10	Output Data CH 9	Output Data CH 8

Data description:

Output Data CH x: the output value of channel x.

4 IP-IA-16DINDON process data definition

Input data								
Bit No.	Bit 7	Bit 6	Bit 5	Bit 4	Bit 3	Bit 2	Bit 1	Bit 0
Byte 0	Input Data CH 7	Input Data CH 6	Input Data CH 5	Input Data CH 4	Input Data CH 3	Input Data CH 2	Input Data CH 1	Input Data CH 0
Byte 1	Input Data CH 15	Input Data CH 14	Input Data CH 13	Input Data CH 12	Input Data CH 11	Input Data CH 10	Input Data CH 9	Input Data CH 8

Data description:

Input Data CHx: the input value of channel x.

Output data								
Bit No.	Bit 7	Bit 6	Bit 5	Bit 4	Bit 3	Bit 2	Bit 1	Bit 0
Byte 0	Output Data CH 7	Output Data CH 6	Output Data CH 5	Output Data CH 4	Output Data CH 3	Output Data CH 2	Output Data CH 1	Output Data CH 0
Byte 1	Output Data CH 15	Output Data CH 14	Output Data CH 13	Output Data CH 12	Output Data CH 11	Output Data CH 10	Output Data CH 9	Output Data CH 8

Data description:

Output Data CHx: the output value of channel x.

5 IP-IA-8DIP8DOP process data definition

Input data								
Bit No.	Bit 7	Bit 6	Bit 5	Bit 4	Bit 3	Bit 2	Bit 1	Bit 0
Byte 0	Input Data CH 7	Input Data CH 6	Input Data CH 5	Input Data CH 4	Input Data CH 3	Input Data CH 2	Input Data CH 1	Input Data CH 0

Data description:

Input Data CH x: the input value of channel x.

Output data								
Bit No.	Bit 7	Bit 6	Bit 5	Bit 4	Bit 3	Bit 2	Bit 1	Bit 0
Byte 0	Output Data CH 15	Output Data CH 14	Output Data CH 13	Output Data CH 12	Output Data CH 11	Output Data CH 10	Output Data CH 9	Output Data CH 8

Data description:

Output Data CH x: the output value of channel x.

6 IP-IA-8DIN8DON process data definition

Input data								
Bit No.	Bit 7	Bit 6	Bit 5	Bit 4	Bit 3	Bit 2	Bit 1	Bit 0
Byte 0	Input Data CH 7	Input Data CH 6	Input Data CH 5	Input Data CH 4	Input Data CH 3	Input Data CH 2	Input Data CH 1	Input Data CH 0

Data description:

Input Data CH x: the input value of channel x.

Output data								
Bit No.	Bit 7	Bit 6	Bit 5	Bit 4	Bit 3	Bit 2	Bit 1	Bit 0
Byte 0	Output Data CH 15	Output Data CH 14	Output Data CH 13	Output Data CH 12	Output Data CH 11	Output Data CH 10	Output Data CH 9	Output Data CH 8

Data description:

Output Data CH x: the output value of channel x.

7 IP-IA-16DIN process data definition

Input data								
Bit No.	Bit 7	Bit 6	Bit 5	Bit 4	Bit 3	Bit 2	Bit 1	Bit 0
Byte 0	Input Data CH 7	Input Data CH 6	Input Data CH 5	Input Data CH 4	Input Data CH 3	Input Data CH 2	Input Data CH 1	Input Data CH 0
Byte 1	Input Data CH 15	Input Data CH 14	Input Data CH 13	Input Data CH 12	Input Data CH 11	Input Data CH 10	Input Data CH 9	Input Data CH 8

Data description:

Input Data CH x: the input value of channel x.

8 IP-IA-16DIP process data definition

Input data								
Bit No.	Bit 7	Bit 6	Bit 5	Bit 4	Bit 3	Bit 2	Bit 1	Bit 0
Byte 0	Input Data CH 7	Input Data CH 6	Input Data CH 5	Input Data CH 4	Input Data CH 3	Input Data CH 2	Input Data CH 1	Input Data CH 0
Byte 1	Input Data CH 15	Input Data CH 14	Input Data CH 13	Input Data CH 12	Input Data CH 11	Input Data CH 10	Input Data CH 9	Input Data CH 8

Data description:

Input Data CH x: the input value of channel x.

9 IO-LINK ISDU functional submodule process data definition

Input data								
Bit No.	Bit 7	Bit 6	Bit 5	Bit 4	Bit 3	Bit 2	Bit 1	Bit 0
Byte 0	Operation ID							
Byte 1	ISDU RX Length							
Byte 2	ISDU Data 0							
……	……							
Byte 33	ISDU Data 31							

Data description:

Operation ID: Operation ID.

ISDU RX Length: Received data length up to 32 Bytes.

ISDU Data: ISDU data returned.

Output data								
Bit No.	Bit 7	Bit 6	Bit 5	Bit 4	Bit 3	Bit 2	Bit 1	Bit 0
Byte 0	ISDU Port							
Byte 1	ISDU index HexHigh							
Byte 2	ISDU index HexLow							
Byte 3	ISDU subindex							
Byte 4	ISDU Write length (Read Invalid)							
Byte 5	ISDU Write(0X01)/Read(0X00)							
Byte 6	Operation ID							
Byte 7	ISDU Data 0							
…….	……							
Byte 38	ISDU Data 31							

Data description:

ISDU Port: Operation ISDU port.

ISDU inde HexHigh: the ISDU index number high.

ISDU index HexLow: the ISDU index number low.

ISDU subindex: the ISDU subindex number.

ISDU Write length (Read Invalid): Write ISDU data length (invalid when read), up to 32 bytes.

ISDU Write(0X01)/Read(0X00): Operates the ISDU type, reads 0x00 writes 0x01.

Operation ID: The ISDU ID of this operation (the ID needs to be changed for each operation).

ISDU Data: Write ISDU data.

10 IO-Link event function submodule process data definition

IO-Link event 01/02/06/10/15 input data								
Bit No.	Bit 7	Bit 6	Bit 5	Bit 4	Bit 3	Bit 2	Bit 1	Bit 0
Byte 0	Event Type 0				Event Source 0			
Byte 1	Reserved							
Byte 2	Event Code 0							
Byte 3								
……	……							
Byte 4*n-3	Event buffer n							
Byte 4*n-2								
Byte 4*n-1								

Byte 4*n	

Data description:

Event Type 0: Event trigger type

1: indicates a message

2: indicates a warning

3: indicates an error

Event Source 0: event trigger port

Event Code 0: Event code

Note: An event of 4 bytes of data is composed of the above description, and the event codes supported by the master module can be described in the following table:

Event code	Description
0x1800	Abnormal port communication
0x1805	The chip temperature is too high
0x1807	The port is powered, overcurrent
0x1813	Port CQ overcurrent
0x180E	UA undervoltage
0x180F	UA overvoltage
0x180A	US undervoltage
0x180B	US overvoltage

IO-Link Event/01 outputs data								
Bit No.	Bit 7	Bit 6	Bit 5	Bit 4	Bit 3	Bit 2	Bit 1	Bit 0
Byte 0	Reserved						Clear Comm and Again (Rever sed)	Clear event 0

Data description:

Clear event0: Set 1 to clear event 0.

Clear Command Again (Reversed): The clear command again requires a reversal operation.

IO-Link Event/02 Output Data								
Bit No.	Bit 7	Bit 6	Bit 5	Bit 4	Bit 3	Bit 2	Bit 1	Bit 0

Byte 0	Reserved	Clear Comm and Again (Reversed)	Clear event 1	Clear event 0

Data description:

Clear event0: Set 1 to clear event 0.

Clear event1: Set 1 to clear event 1.

Clear Command Again (Reversed): The clear command again requires a reversal operation.

IO-Link Events/04 Output Data								
Bit No.	Bit 7	Bit 6	Bit 5	Bit 4	Bit 3	Bit 2	Bit 1	Bit 0
Byte 0	Reserved			Clear Comm and Again (Reversed)	Clear event 3	Clear event 2	Clear event 1	Clear event 0

Data description:

Clear event0: Set 1 to clear event 0.

Clear event1: Set 1 to clear event 1.

Clear event2: Set 1 to clear event 2.

Clear event3: Set 1 to clear event 3.

Clear Command Again (Reversed): The Clear command again requires a reversal operation (default: 0).

IO-Link Events/06 Output Data								
Bit No.	Bit 7	Bit 6	Bit 5	Bit 4	Bit 3	Bit 2	Bit 1	Bit 0
Byte 0	Reserved	Clear Comm and Again (Reversed)	Clear event 5	Clear event 4	Clear event 3	Clear event 2	Clear event 1	Clear event 0

Data description:

Clear event0: Set 1 to clear event 0.

Clear event1: Set 1 to clear event 1.

Clear event2: Set 1 to clear event 2.

Clear event3: Set 1 to clear event 3.

Clear event4: Set 1 to clear event 4.

Clear event5: Set 1 to clear event 5.

Clear Command Again (Reversed): Clearing the command again requires a reversal operation.

IO-Link Events/10 Output Data								
Bit No.	Bit 7	Bit 6	Bit 5	Bit 4	Bit 3	Bit 2	Bit 1	Bit 0
Byte 0	Clear event 7	Clear event 6	Clear event 5	Clear event 4	Clear event 3	Clear event 2	Clear event 1	Clear event 0
Byte 1	Reserved					Clear Command Again (Reversed)	Clear event 9	Clear event 8

Data description:

Clear event0: Set 1 to clear event 0.

Clear event1: Set 1 to clear event 1.

Clear event2: Set 1 to clear event 2.

Clear event3: Set 1 to clear event 3.

Clear event4: Set 1 to clear event 4.

Clear event5: Set 1 to clear event 5.

Clear event6: Set 1 to clear event 6.

Clear event7: Set 1 to clear event 7.

Clear event8: Set 1 to clear event 8.

Clear event9: Set 1 to clear event 9.

Clear Command Again (Reversed): The clear command again requires a reversal operation.

IO-Link Events/15 Output Data								
Bit No.	Bit 7	Bit 6	Bit 5	Bit 4	Bit 3	Bit 2	Bit 1	Bit 0
Byte 0	Clear event 7	Clear event 6	Clear event 5	Clear event 4	Clear event 3	Clear event 2	Clear event 1	Clear event 0
Byte 1	Clear Command Again (Reversed)	Clear event 14	Clear event 13	Clear event 12	Clear event 11	Clear event 10	Clear event 9	Clear event 8

Data description:

Clear event0: Set 1 to clear event 0.

Clear event1: Set 1 to clear event 1.

Clear event2: Set 1 to clear event 2.

Clear event3: Set 1 to clear event 3.

Clear event4: Set 1 to clear event 4.

Clear event5: Set 1 to clear event 5.

Clear event6: Set 1 to clear event 6.

Clear event7: Set 1 to clear event 7.

Clear event8: Set 1 to clear event 8.

Clear event9: Set 1 to clear event 9.

Clear event10: Set 1 to clear event 10.

Clear event11: Set 1 to clear event 11.

Clear event12: Set 1 to clear event 12.

Clear event13: Set 1 to clear event 13.

Clear event14: Set 1 to clear event 14.

Clear Command Again (Reversed): The clear command again requires a reversal operation.

11 Functional submodule - Com ERR process data definition

Input data								
Bit No.	Bit 7	Bit 6	Bit 5	Bit 4	Bit 3	Bit 2	Bit 1	Bit 0

Byte 0	ComErr Data Port 8	ComErr Data Port 7	ComErr Data Port 6	ComErr Data Port 5	ComErr Data Port 4	ComErr Data Port 3	ComErr Data Port 2	ComErr Data Port 1

Data description:

ComErr Data Port x: Port x Communication Status.

0: Port communication is normal

1: Abnormal port communication

12 The function submodule PD Valid process data definition

Input data								
Bit No.	Bit 7	Bit 6	Bit 5	Bit 4	Bit 3	Bit 2	Bit 1	Bit 0
Byte 0	PD Valid Data Port 8	PD Valid Data Port 7	PD Valid Data Port 6	PD Valid Data Port 5	PD Valid Data Port 4	PD Valid Data Port 3	PD Valid Data Port 2	PD Valid Data Port 1

Data description:

PD Valid Data Port x: Port x input process data is valid.

0: Invalid port input data

1: Port input data is valid

13 Function submodule Port Event Flag process data definition

Input data								
Bit No.	Bit 7	Bit 6	Bit 5	Bit 4	Bit 3	Bit 2	Bit 1	Bit 0
Byte 0	Event State Port 8	Event State Port 7	Event State Port 6	Event State Port 5	Event State Port 4	Event State Port 3	Event State Port 2	Event State Port 1

Data description:

Event State Port x: Event exists on port x.

0: No events on the port

1: Port Presence Event

6 Dimension

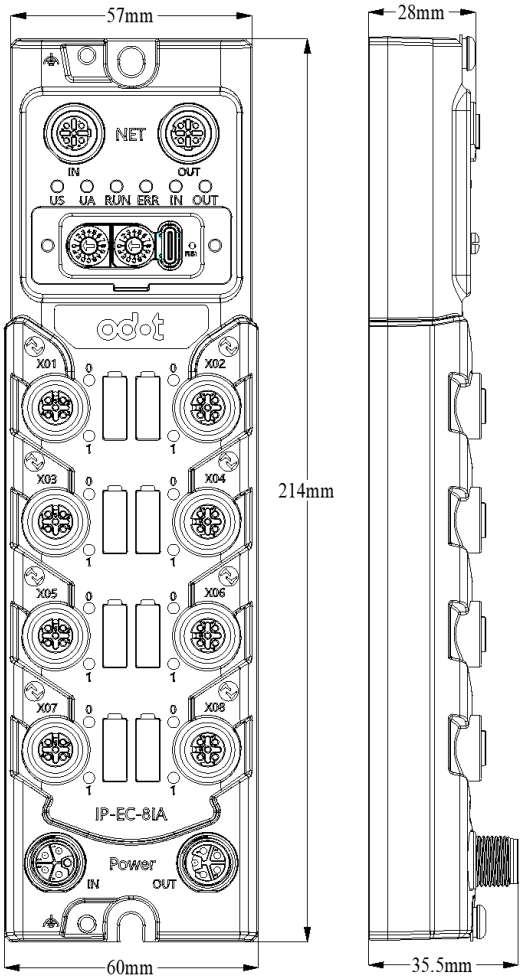
57mm
28mm
NET
IN
OUT
US UA RUN ERR IN OUT
X01
X02
X03
X04
X05
X06
X07
X08
214mm
IP-EC-8IA
Power
IN
OUT
60mm
35.5mm

3 IO-Link Slave

IP-IA-8DIP8DOP IO-Link Slave/ 8 Channels Digital Input (PNP) & 8 Channels Digital Output (PNP)

1 Module Features

- Support the Data Storage function;
- Support 8 channels digital input and 8 channels digital output;
- Support the input holding function (Keep the read input value unchanged for a certain period of time);
- Support configurable filter time;

2 Technical Parameter

IO-Link Communication Protocol	
Protocol Standard	IO-Link V1.1 slave protocol
Transfer Rate	Default: COM2 (38.4kbps)
Communication Port	
Port Definition	M12 A-code 4 Pin, needle end Pin1: 24V (Us), the positive of system power Pin2: 24V (Ua), the positive of field power Pin3: 0V (GND) Pin4: C/Q
Us Power Supply Rated Voltage	24 V DC
Ua Power Supply Rated Voltage	24 V DC
Us/Ua Galvanic Isolation	Not support
Module Consumption	Max.50mA@24VDC
IO Port	
Quantity	8 Ports, 8 channels digital input, 8 channels digital output (M12, A-code, 5 Pin, hole end)
Terminal Type	8×M12, hole end
Port Definition (X01~04)	Pin1: 24V, positive of power output, provided by Us Pin2: Signal 1, digital input Pin3: 0V Pin4: Signal 2, digital input Pin5: FG, functional grounding
Port Definition (X05~08)	Pin1: 24V, positive of power output, provide by Us Pin2: Signal, 1 digital output Pin3: 0V Pin4: Signal 2, digital output Pin5: FG, functional grounding
Digital Input	
Channel Indicator	Support, green
Input Feature	Type 3, high level is valid (PNP)
Rated Voltage	24V DC
Signal “0”	-5~+30V (Us power rail)
Signal “1”	+11~+30V (Us power rail)
Minimum Voltage	-5V DC
Maximum Voltage	+30V DC
Input Current	2.5mA (for the signal “1”, rated voltage input)
Input Delay	OFF to ON: Max.500μs ON to OFF: Max. 500μs
Between Channels	The potential is not isolated
Filter	Configurable
Digital Output	
Channel Indicator	Support, green
Output Type	PNP, High level
Load Capacity	Resistive load: 0.5A Inductive load: 12W Lamp load: 5W

Rated Output Current of Pin 1	350mA (single channel)
Output Current of Module	Max.3.6A
Minimum Load Resistance	48Ω
Residual Current	Max.10μA (for signal “0”)
Output Delay	OFF to ON: Max.100μs ON to OFF: Max. 200μs
Switch Frequency	Rated power resistive load: COM1: 10Hz; COM2: 35Hz; COM3: 80Hz; Rated power inductive load: COM1/COM2/COM3: 2.5Hz; Rated power lamp load: COM1: 10Hz; COM2: 12.5Hz; COM3: 12.5Hz;
Potential Isolation	No isolation between channels
Diagnosis Function	
Status Display	Power indicator, running state, communication state, running error indicator
Diagnosis Function	Communication diagnosis
Us power anti-reverse protection	Support
Us power overvoltage detection	Support, Us>30VDC triggered
Us power undervoltage detection	Support, 9VDC≤Us≤18VDC triggered
Dimension	
Dimension	160 mm*60 mm*35.5 mm
Configuration Parameter	
Master Configuration	Support
Software Configuration	Support

3 Hardware Description

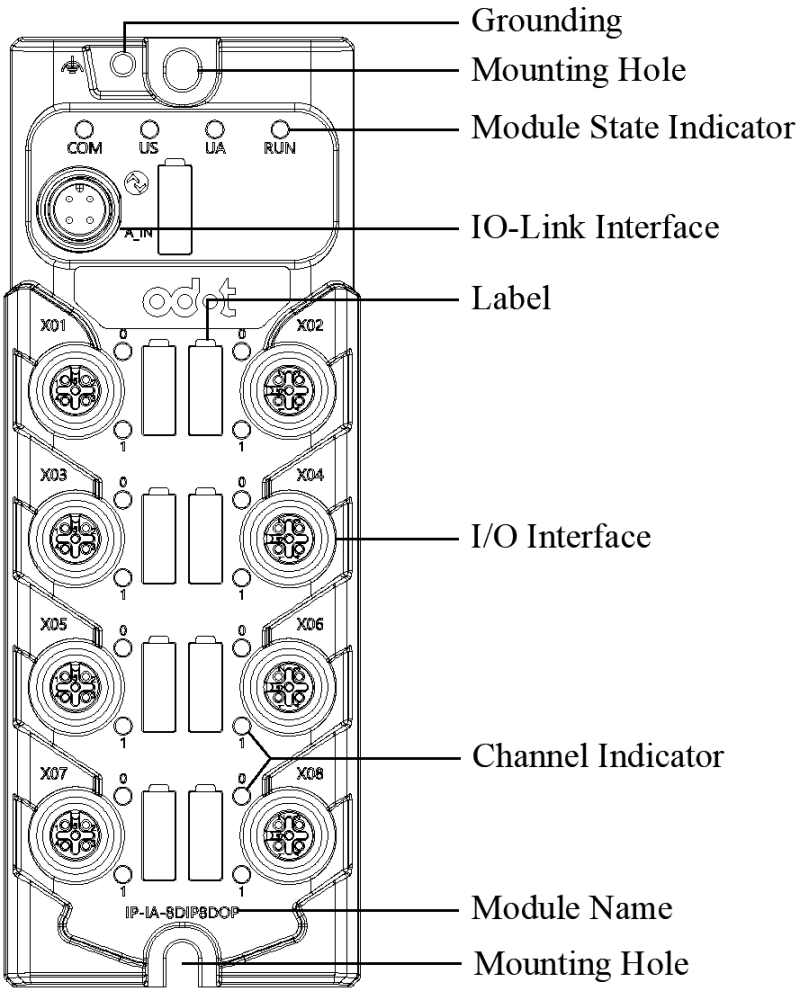

3.1 LED Indicator Definition

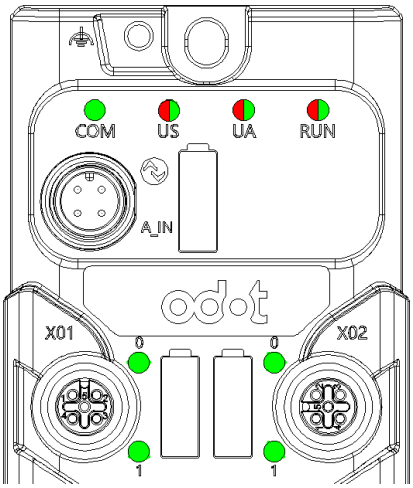

Us Power indicator (Red/ Green)	Description
ON (Green)	Us Power supply is normal
ON (Red)	Us Power supply overvoltage
Flash (Red)	Us Power supply undervoltage
Ua Power indicator (Red/ Green)	Description
ON (Green)	Ua Power supply is normal
ON (Red)	Ua Power supply overvoltage
Flash (Red)	Ua Power supply undervoltage
RUN Network running indicator (Red/Green)	Description
Slow flash (Green)	IDLE mode
ON (Orange)	DS error
ON (Green)	Module works normally
ON (Red)	Module has an exception affecting the channel
Slow flash (Red)	IO-Link offline mode
COM indicator (Green)	Description
ON	Pre-operation mode
Slow flash	Module works normally
0-15 channel indicator (Green)	Description
ON	The channel data is effective
OFF	The channel data is ineffective

3.2 Port Definition

IO-Link port pin definition

Port Schematic Diagram	Pin	Mark	Description
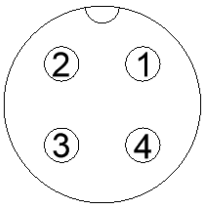	1	24V	Positive of system power (Us)
	2	24V	Positive of auxiliary power supply (Ua)
	3	0V	GND
	4	C/Q	IO-Link data transmission

IO port pin definition (X01~X04)

Port Schematic Diagram	Pin	Mark	Description
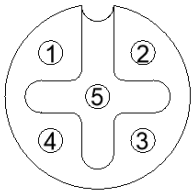	1	24V	Positive of power output, with Us
	2	Signal 1	Digital input (DI)
	3	0V	GND
	4	Signal 2	Digital input (DI)
	5	FG	Functional grounding

IO port pin definition (X05~X08)

Port Schematic Diagram	Pin	Mark	Description
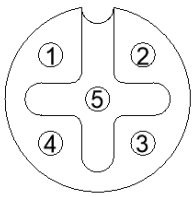	1	24V	Positive of power output, with Us
	2	Signal 1	Digital output (DO)
	3	0V	GND
	4	Signal 2	Digital output (DO)
	5	FG	Functional grounding

3.3 Wirring

1. DI device –High level input (PNP)

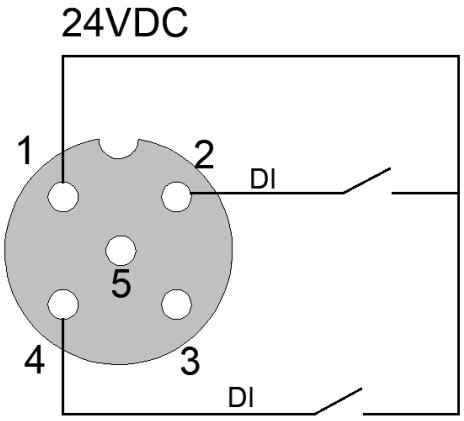

2. DO device –High level output (PNP)

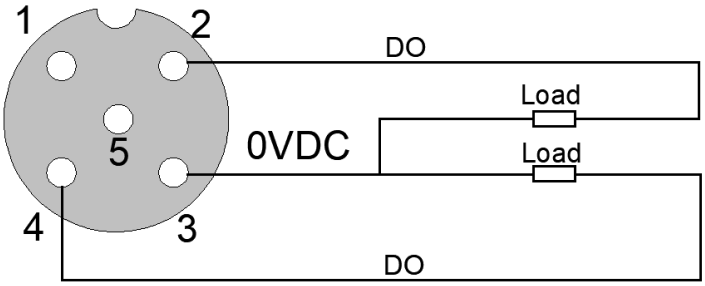

4 Configuration Parameter

Index 0x63 (99)—Subindex 0x00

ISDU								
Bit No	Bit 7	Bit 6	Bit 5	Bit 4	Bit 3	Bit 2	Bit 1	Bit 0
Byte 0	Reserved						Com BaudRate Select	

Com BaudRate Select: COM rate setting (default: 2, manual reset after setting).

1: COM1 (4.8kbps)

2: COM2 (38.4kbps)

3: COM3 (230.4kbps)

Index 0x65 (101)—Subindex 0x00

ISDU								
Bit No	Bit 7	Bit 6	Bit 5	Bit 4	Bit 3	Bit 2	Bit 1	Bit 0
Byte 0	Input Holding Time(ms)							

Input Holding Time(ms): Input holding time (default: 0).

0: Disable

1: 200ms

2: 500ms

3: 1000ms

4: 1500ms

5: 2000ms

6: 3000ms

7: 5000ms

Index 0x66（102）—Subindex 0x00

ISDU								
Bit No	Bit 7	Bit 6	Bit 5	Bit 4	Bit 3	Bit 2	Bit 1	Bit 0
Byte 0	Input Filtering Time(ms)							
Byte 1								

Input Filtering Time(ms): Filtering time (default: 10ms)

Index 0x67（103）—Subindex 0x00

Configuration parameter								
Bit No	Bit 7	Bit 6	Bit 5	Bit 4	Bit 3	Bit 2	Bit 1	Bit 0
Byte 0	Fault Action for Output (CH 15)	Fault Action for Output (CH 14)	Fault Action for Output (CH 13)	Fault Action for Output (CH 12)	Fault Action for Output (CH 11)	Fault Action for Output (CH 10)	Fault Action for Output (CH 9)	Fault Action for Output (CH 8)

Fault Action For Output (CH8-CH15): Fault output mode, when the IO module detects an internal bus anomaly and fails to communicate with the adapter and enters SIO mode, the output data is processed in this way (default: 0).

0: Holding the last output

1: Output the fault value

Index 0x68（104）—Subindex 0x00

Configuration parameter								
Bit No	Bit 7	Bit 6	Bit 5	Bit 4	Bit 3	Bit 2	Bit 1	Bit 0
Byte 0	Fault Value for Output (CH 15)	Fault Value for Output (CH 14)	Fault Value for Output (CH 13)	Fault Value for Output (CH 12)	Fault Value for Output (CH 11)	Fault Value for Output (CH 10)	Fault Value for Output (CH 9)	Fault Value for Output (CH 8)

Fault Value for Output (CH8-CH15): When the fault output mode is 1, this bit sets the fault output value, and when the IO module internal bus is offline, this setting value is output (default: 0).

0: Output 0

1: Output 1

5 Process Data Definition

Input data								
Bit No	Bit 7	Bit 6	Bit 5	Bit 4	Bit 3	Bit 2	Bit 1	Bit 0
Byte 0	DI CH#7	DI CH#6	DI CH#5	DI CH#4	DI CH#3	DI CH#2	DI CH#1	DI CH#0

Data description:

DI CH#(0-7): When the bit is 1, the corresponding channel input signal is valid, and when it is 0, the input is invalid.

0: The input signal is invalid

1: The input value is valid

Output value								
Bit No	Bit 7	Bit 6	Bit 5	Bit 4	Bit 3	Bit 2	Bit 1	Bit 0
Byte 0	DO CH#15	DO CH#14	DO CH#13	DO CH#12	DO CH#11	DO CH#10	DO CH#9	DO CH#8

Data description:

DO CH#(8-15): When the bit is 1, the output signal of the corresponding channel is valid, and when it is 0, the output is invalid.

0: The output signal is invalid

1: The output signal is valid

General event

Event code	Event type	Event name
0x18FF	Warning	DS error
0x8CA0	Warning	US overvoltage
0x8CA1	Warning	US undervoltage
0x8CA2	Warning	UA error

6 Dimension

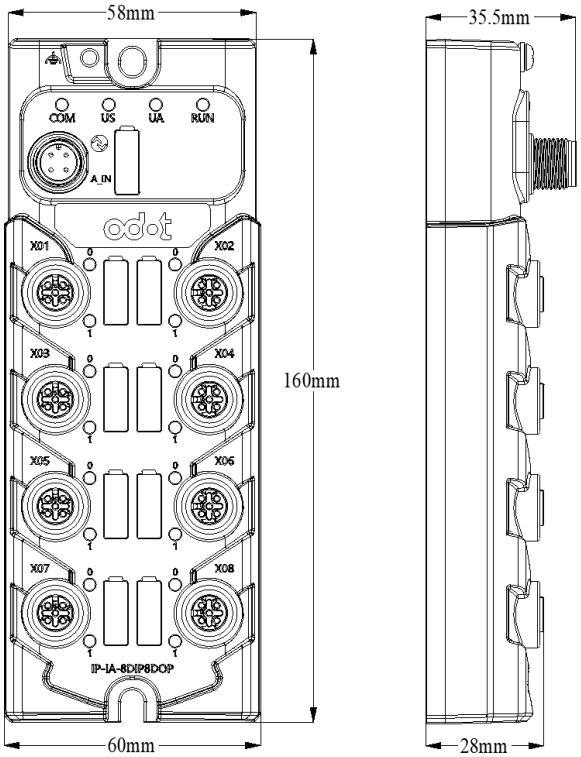
58mm
35.5mm
COM
US
UA
RUN
A_IN
X01
X02
X03
X04
X05
X06
X07
X08
160mm
IP-IA-8DIP8DOP
60mm
28mm

IP-IA-8DIN8DON IO-Link Slave/ 8 Channels Digital Input (NPN) & 8 Channels Digital Output (NPN)

1 Module Feature

- Support the Data Storage function;
- Support 8 channels digital input and 8 channels digital output;
- Support the input holding function (Keep the read input value unchanged for a certain period of time);
- Support configurable filter time;

2 Technical Parameter

IO-Link Communication Protocol	
Protocol Standard	IO-Link V1.1 slave protocol
Transfer Rate	Default: COM2 (38.4kbps)
Communication Port	
Port Definition	M12 A-code 4 Pin, needle end Pin1: 24V(Us), the positive of system power Pin2: 24V(Ua), the positive of field power Pin3: 0V(GND) Pin4: C/Q
Us Power Supply Rated Voltage	24 V DC
Ua Power Supply Rated Voltage	24 V DC
US/UA Galvanic Isolation	Not support
Module Consumption	Max.50mA@24VDC
IO Port	
Quantity	8 Ports, 8 channels digital input, 8 channels digital output (M12, A-code, 5 Pin, hole end)
Terminal Type	8×M12, hole end
Port Definition (X01~04)	Pin1: 24V, positive of power output, provide by Us Pin2: Signal 1, digital input Pin3: 0V Pin4: Signal 2, digital input Pin5: FG, functional grounding
Port Definition (X05~08)	Pin1: 24V, positive of power output, provided by Us Pin2: Signal, 1 digital output Pin3: 0V Pin4: Signal 2, digital output Pin5: FG, functional grounding
Digital Input	
Channel Indicator	Support, green
Input Feature	Type 3, Low level (NPN)
Rated Voltage	24VDC
Signal “0”	-5~+30V (Us power rail)
Signal “1”	+11~+30V (Us power rail)
Minimum Voltage	-5V DC
Maximum Voltage	+30V DC
Input Current	2.5mA (for the signal “1”, rated voltage input)
Input Delay	OFF to ON: Max.500μs ON to OFF: Max. 500μs
Between Channels	The potential is not isolated
Filter	Configurable
Digital Output	
Channel Indicator	Support, green
Output Type	NPN, Low level
Load Capacity	Resistive load: 0.5A Inductive load: 12W

	Lamp load: 5W
Rated Output Current of Pin 1	350mA (single channel)
Output Current of Module	Max.3.6A
Minimum Load Resistance	48Ω
Residual Current	Max.10μA (for signal “0”)
Output Delay	OFF to ON: Max.100μs ON to OFF: Max. 200μs
Switch Frequency	Rated power resistive load: COM1: 10Hz; COM2: 35Hz; COM3: 80Hz; Rated power inductive load: COM1/COM2/COM3: 2.5Hz; Rated power lamp load: COM1: 10Hz; COM2: 12.5Hz; COM3: 12.5Hz;
Potential Isolation	No isolation between channels
Diagnosis Function	
Status Display	Power indicator, running state, communication state, running error indicator
Diagnosis Function	Communication diagnosis
Us power anti-reverse protection	Support
Us power overvoltage detection	Support, Us>30VDC triggered
Us power undervoltage detection	Support, 9VDC⩽Us⩽18VDC triggered
Dimension	
Dimension	160 mm*60 mm*35.5 mm

3 Hardware Description

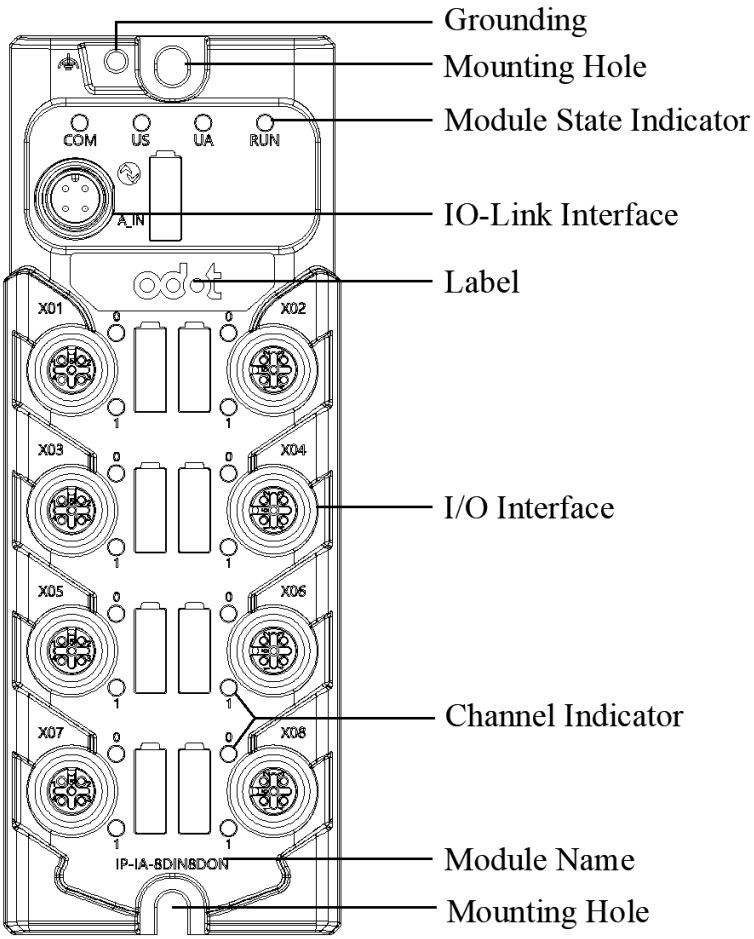

3.1 LED Indicator Definition

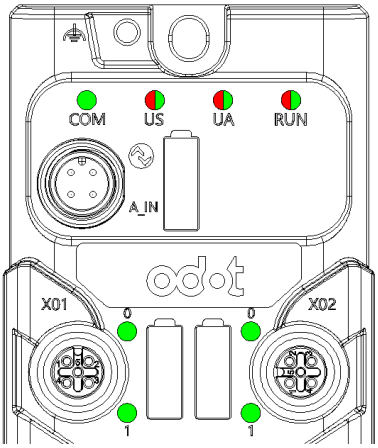

Us Power indicator (Red/ Green)	Description
ON (Green)	Us Power supply is normal
ON (Red)	Us Power supply overvoltage
Flash (Red)	Us Power supply undervoltage
Ua Power indicator (Red/ Green)	Description
ON (Green)	Ua Power supply is normal
ON (Red)	Ua Power supply overvoltage
Flash (Red)	Ua Power supply undervoltage
RUN Network running indicator (Red/Green)	Description
Slow flash (Green)	IDLE mode
ON (Orange)	DS error
ON (Green)	Module works normally
ON (Red)	Module has an exception affecting the channel
Slow flash (Red)	IO-Link offline mode
COM indicator (Green)	Description
ON	Pre-operation mode
Slow flash	Module works normally
0-15 channel indicator (Green)	Description
ON	The channel data is effective
OFF	The channel data is ineffective

3.2 Port Definition

IO-Link port pin definition

Port Schematic Diagram	Pin	Mark	Description
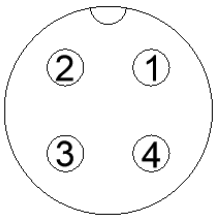	1	24V	Positive of system power (Us)
	2	24V	Positive of auxiliary power supply (Ua)
	3	0V	GND
	4	C/Q	IO-Link data transmission

IO port pin definition (X01~X04)

Port Schematic Diagram	Pin	Mark	Description
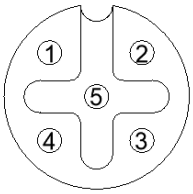	1	24V	Positive of power output, with Us
	2	Signal 1	Digital input (DI)
	3	0V	GND
	4	Signal 2	Digital input (DI)
	5	FG	Functional grounding

IO port pin definition (X05~X08)

Port Schematic Diagram	Pin	Mark	Description
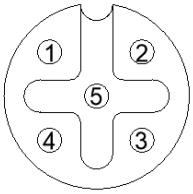	1	24V	Positive of power output, with Us
	2	Signal 1	Digital output (DO)
	3	0V	GND
	4	Signal 2	Digital output (DO)
	5	FG	Functional grounding

3.3 Wirring

1. DI device –Low level input (NPN)

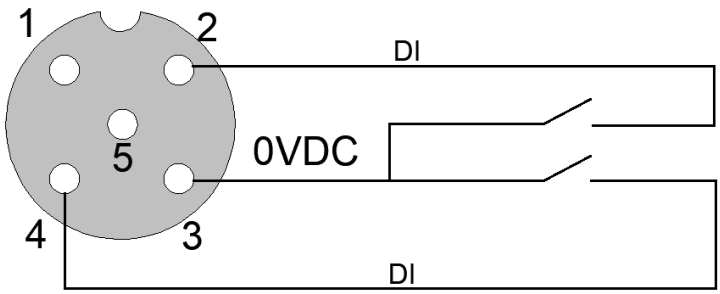

2.DO device –Low level output (NPN)

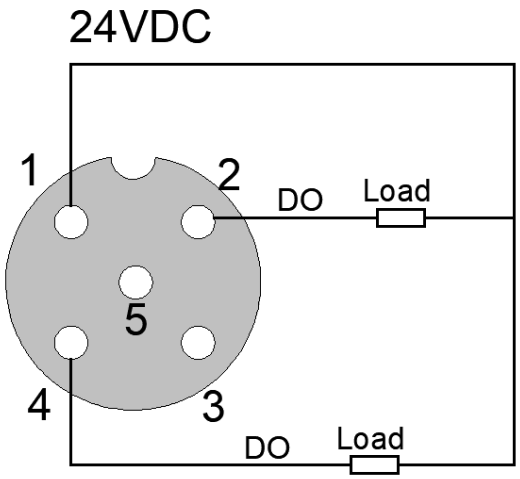

4 Configuration Parameter

Index 0x63 (99)—Subindex 0x00

ISDU								
Bit No	Bit 7	Bit 6	Bit 5	Bit 4	Bit 3	Bit 2	Bit 1	Bit 0
Byte 0	Reserved						Com BaudRate Select	

Com BaudRate Select: COM rate setting (default: 2, manual reset after setting).

1: COM1 (4.8kbps)

2: COM2 (38.4kbps)

3: COM3 (230.4kbps)

Index 0x65 (101)—Subindex 0x00

ISDU								
Bit No	Bit 7	Bit 6	Bit 5	Bit 4	Bit 3	Bit 2	Bit 1	Bit 0
Byte 0	Input Holding Time(ms)							

Input Holding Time(ms): Input holding time (default: 0).

0: Disable

1: 200ms

2: 500ms

3: 1000ms

4: 1500ms

5: 2000ms

6: 3000ms

7: 5000ms

Index 0x66（102）—Subindex 0x00

ISDU								
Bit No	Bit 7	Bit 6	Bit 5	Bit 4	Bit 3	Bit 2	Bit 1	Bit 0
Byte 0	Input Filtering Time(ms)							
Byte 1								

Input Filtering Time(ms): Filtering time (default: 10ms)

Index 0x67（103）—Subindex 0x00

Configuration parameter								
Bit No	Bit 7	Bit 6	Bit 5	Bit 4	Bit 3	Bit 2	Bit 1	Bit 0
Byte 0	Fault Action for Output (CH 15)	Fault Action for Output (CH 14)	Fault Action for Output (CH 13)	Fault Action for Output (CH 12)	Fault Action for Output (CH 11)	Fault Action for Output (CH 10)	Fault Action for Output (CH 9)	Fault Action for Output (CH 8)

Fault Action For Output (CH8-CH15): Fault output mode, when the IO module detects an internal bus anomaly and fails to communicate with the adapter and enters SIO mode, the output data is processed in this way (default: 0).

0: Holding the last output

1: Output the fault value

Index 0x68（104）—Subindex 0x00

Configuration parameter								
Bit No	Bit 7	Bit 6	Bit 5	Bit 4	Bit 3	Bit 2	Bit 1	Bit 0
Byte 0	Fault Value for Output (CH 15)	Fault Value for Output (CH 14)	Fault Value for Output (CH 13)	Fault Value for Output (CH 12)	Fault Value for Output (CH 11)	Fault Value for Output (CH 10)	Fault Value for Output (CH 9)	Fault Value for Output (CH 8)

Fault Value for Output (CH8-CH15): When the fault output mode is 1, this bit sets the fault output value, and when the IO module internal bus is offline, this setting value is output (default: 0).

0: Output 0

1: Output 1

5 Process Data Definition

Input data								
Bit No	Bit 7	Bit 6	Bit 5	Bit 4	Bit 3	Bit 2	Bit 1	Bit 0
Byte 0	DI CH#7	DI CH#6	DI CH#5	DI CH#4	DI CH#3	DI CH#2	DI CH#1	DI CH#0

Data description:

DI CH#(0-7): When the bit is 1, the corresponding channel input signal is valid, and when it is 0, the input is invalid.

0: The input signal is invalid

1: The input value is valid

Output value								
Bit No	Bit 7	Bit 6	Bit 5	Bit 4	Bit 3	Bit 2	Bit 1	Bit 0
Byte 0	DO CH#15	DO CH#14	DO CH#13	DO CH#12	DO CH#11	DO CH#10	DO CH#9	DO CH#8

Data description:

DO CH#(8-15): When the bit is 1, the output signal of the corresponding channel is valid, and when it is 0, the output is invalid.

0: The output signal is invalid

1: The output signal is valid

General event

Event code	Event type	Event name
0x18FF	Warning	DS error
0x8CA0	Warning	US overvoltage
0x8CA1	Warning	US undervoltage
0x8CA2	Warning	UA error

6 Dimension

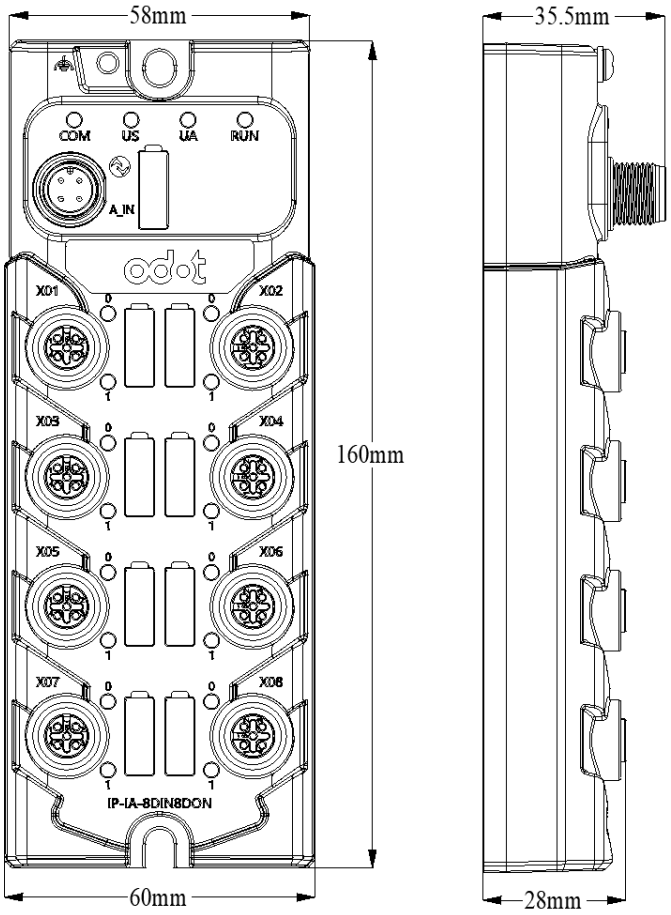
58mm
35.5mm
COM
US
UA
RUN
A_IN
X01
X02
X03
X04
X05
X06
X07
X08
IP-IA-8DIN8DON
160mm
60mm
28mm

IP-IA-16DIP IO-Link Slave/ 16 Channels Digital Input (PNP)

1 Module Features

- Support the Data Storage function;
- Support 16 channels digital input;
- Support the input holding function (Keep the read input value unchanged for a certain period of time);
- Support configurable filter time;

2 Technical Parameter

IO-Link Communication Protocol	
Protocol Standard	IO-Link V1.1 slave protocol
Transfer Rate	Default: COM2 (38.4kbps)
Communication Port	
Port Definition	M12 A-code 4 Pin, needle end Pin1: 24V (Us), the positive of system power Pin2: NC Pin3: 0V (GND) Pin4: C/Q
Us Power Supply Rated Voltage	24VDC
Module Consumption	Max.50mA@24VDC
IO Port	
Quantity	8 Ports, 16 channels digital input (M12, A-code, 5 Pin, hole end)
Terminal Type	8×M12, hole end
Port Definition	Pin1: 24V, positive of power output, provide by Us Pin2: Signal 1, digital input Pin3: 0V Pin4: Signal 2, digital input Pin5: FG, functional grounding
Digital Input	
Channel Indicator	Support, green
Input Feature	Type 3, Low level (NPN)
Rated Voltage	24VDC
Signal “0”	-5~+30V (Us power rail)
Signal “1”	+11~+30V (Us power rail)
Minimum Voltage	-5V DC
Maximum Voltage	+30V DC
Input Current	2.5mA (for the signal “1”, rated voltage input)
Input Delay	OFF to ON: Max.500μs ON to OFF: Max. 500μs
Between Channels	The potential is not isolated
Filter	Configurable
Diagnosis Function	
Status Display	Power indicator, running state, communication state, running error indicator
Diagnosis Function	Communication diagnosis
Us power anti-reverse protection	Support
Us power overvoltage detection	Support, Us>30VDC triggered
Us power undervoltage detection	Support, 9VDC⩽Us⩽18VDC triggered
Dimension	
Dimension	160 mm*60 mm*35.5 mm
Configuration Parameter	
Master Configuration	Support
Software Configuration	Support

3 Hardware Description

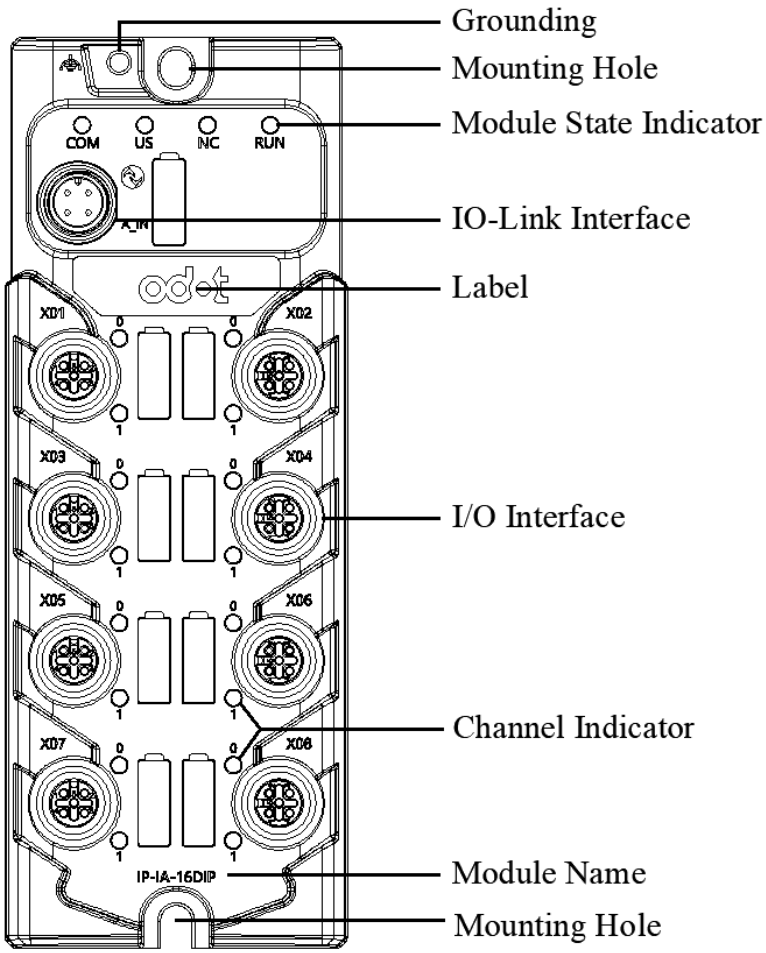

3.1 LED Indicator Definition

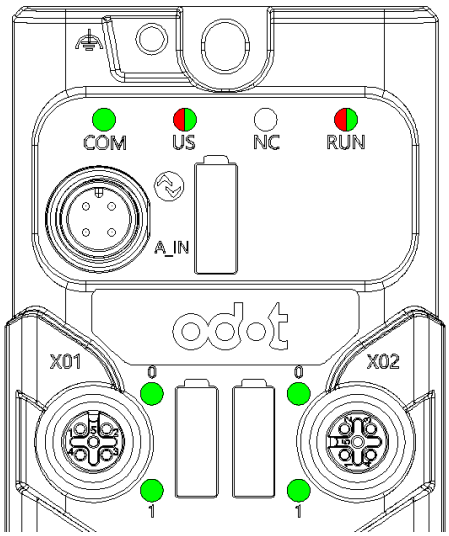

Us Power indicator (Red/ Green)	Description
ON (Green)	Us Power supply is normal
ON (Red)	Us Power supply overvoltage
Flash (Red)	Us Power supply undervoltage
RUN Network running indicator (Red/Green)	Description
Slow flash (Green)	IDLE mode
ON (Orange)	DS error
ON (Green)	Module works normally
ON (Red)	Module has an exception affecting the channel
Slow flash (Red)	IO-Link offline mode
COM indicator (Green)	Description
ON	Pre-operation mode
Slow flash	Module works normally
0-15 channel indicator (Green)	Description
ON	The channel data is effective
OFF	The channel data is ineffective

3.2 Port Definition

IO-Link port pin definition

Port Schematic Diagram	Pin	Mark	Description
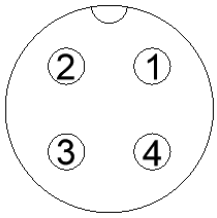	1	24V	Positive of system power (Us)
	2	24V	Positive of auxiliary power supply (Ua)
	3	0V	GND
	4	C/Q	IO-Link data transmission

IO port pin definition (X01~X08)

Port Schematic Diagram	Pin	Mark	Description
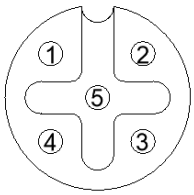	1	24V	Positive of power output, with Us
	2	Signal 1	Digital input (DI)
	3	0V	GND
	4	Signal 2	Digital input (DI)
	5	FG	Functional grounding

3.3 Wirring

DI device –High level input (PNP)

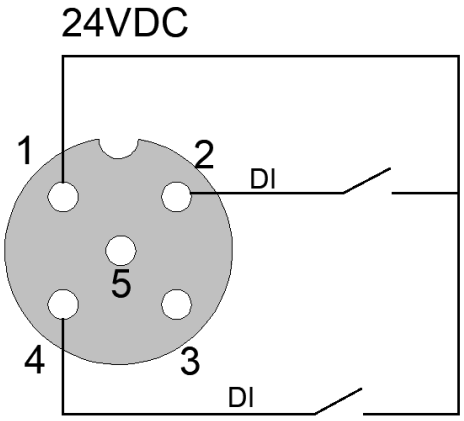

4 Configuration Parameter

Index 0x63 (99)—Subindex 0x00

ISDU								
Bit No	Bit 7	Bit 6	Bit 5	Bit 4	Bit 3	Bit 2	Bit 1	Bit 0
Byte 0	Reserved							Com BaudRate Select

Com BaudRate Select: COM rate setting (default: 2, manual reset after setting).

1: COM1 (4.8kbps)

2: COM2 (38.4kbps)

3: COM3 (230.4kbps)

Index 0x65 (101)—Subindex 0x00

ISDU								
Bit No	Bit 7	Bit 6	Bit 5	Bit 4	Bit 3	Bit 2	Bit 1	Bit 0
Byte 0	Input Holding Time(ms)							

Input Holding Time(ms): Input holding time (default: 0).

0: Disable

1: 200ms

2: 500ms

3: 1000ms

4: 1500ms

5: 2000ms

6: 3000ms

7: 5000ms

Index 0x66（102）—Subindex 0x00

ISDU								
Bit No	Bit 7	Bit 6	Bit 5	Bit 4	Bit 3	Bit 2	Bit 1	Bit 0
Byte 0	Input Filtering Time(ms)							
Byte 1								

Input Filtering Time(ms): Filtering time (default: 10ms)

5 Process Data Definition

Input data								
Bit No	Bit 7	Bit 6	Bit 5	Bit 4	Bit 3	Bit 2	Bit 1	Bit 0
Byte 0	DI CH#7	DI CH#6	DI CH#5	DI CH#4	DI CH#3	DI CH#2	DI CH#1	DI CH#0
Byte 1	DI CH#15	DI CH#14	DI CH#13	DI CH#12	DI CH#11	DI CH#10	DI CH#9	DI CH#8

Data description:

DI CH#(0-15): When the bit is 1, the corresponding channel input signal is valid, and when it is 0, the input is invalid.

0: The input signal is invalid

1: The input value is valid

General event

Event code	Event type	Event name
0x18FF	Warning	DS error
0x8CA0	Warning	US overvoltage
0x8CA1	Warning	US undervoltage
0x8CA2	Warning	UA error

6 Dimension

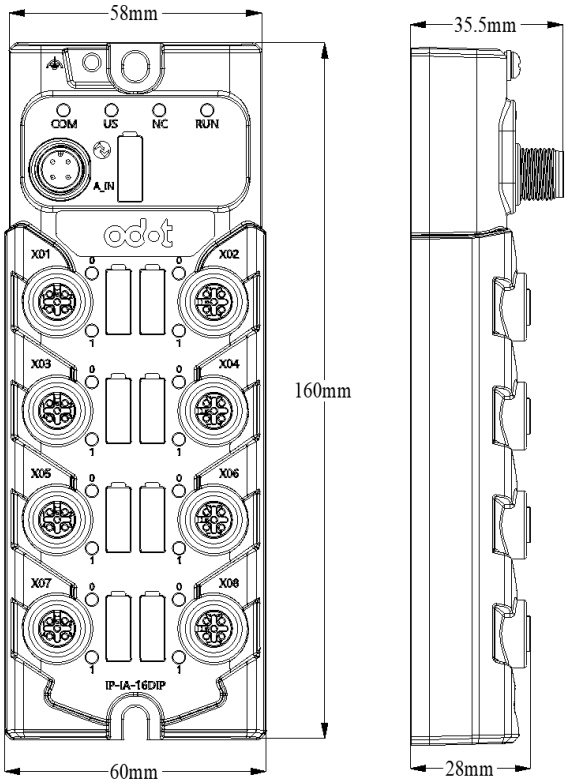
58mm
35.5mm
COM
US
NC
RUN
A_IN
X01
X02
X03
X04
X05
X06
X07
X08
IP-IA-16DIP
160mm
60mm
28mm

IP-IA-16DIN IO-Link Slave/ 16 Channels Digital Input (NPN)

1 Module Features

- Support the Data Storage function;
- Support 16 channels digital input;
- Support the input holding function (Keep the read input value unchanged for a certain period of time);
- Support configurable filter time;

2 Technical Parameter

IO-Link Communication Protocol	
Protocol Standard	IO-Link V1.1 slave protocol
Transfer Rate	Default: COM2 (38.4kbps)
Communication Port	
Port Definition	M12 A-code 4 Pin, needle end Pin1: 24V(Us), the positive of system power Pin2: NC Pin3: 0V(GND) Pin4: C/Q
Us Power Supply Rated Voltage	24VDC
Module Consumption	Max.50mA@24VDC
IO Port	
Quantity	8 Ports, 16 channels digital input (M12, A-code, 5 Pin, hole end)
Terminal Type	8×M12, hole end
Port Definition	Pin1: 24VDC, positive of power output, provide by Us Pin2: Signal1, digital input Pin3: 0V Pin4: Signal2, digital input Pin5: FG, functional grounding
Digital Input	
Channel Indicator	Support, green
Input Feature	Type 3, Low level (NPN)
Rated Voltage	24VDC
Signal “0”	-5~+30V (Us power rail)
Signal “1”	+11~+30V (Us power rail)
Minimum Voltage	-5V DC
Maximum Voltage	+30V DC
Input Current	2.5mA (for the signal “1”, rated voltage input)
Input Delay	OFF to ON: Max.500μs ON to OFF: Max. 500μs
Between Channels	The potential is not isolated
Filter	Configurable
Diagnosis Function	
Status Display	Power indicator, running state, communication state, running error indicator
Diagnosis Function	Communication diagnosis
Us power anti-reverse protection	Support
Us power overvoltage detection	Support, Us>30VDC triggered
Us power undervoltage detection	Support, 9VDC≤Us≤18VDC triggered
Dimension	
Dimension	160 mm*60 mm*35.5 mm
Configuration Parameter	
Master Configuration	Support

Software Configuration	Support

3 Hardware Description

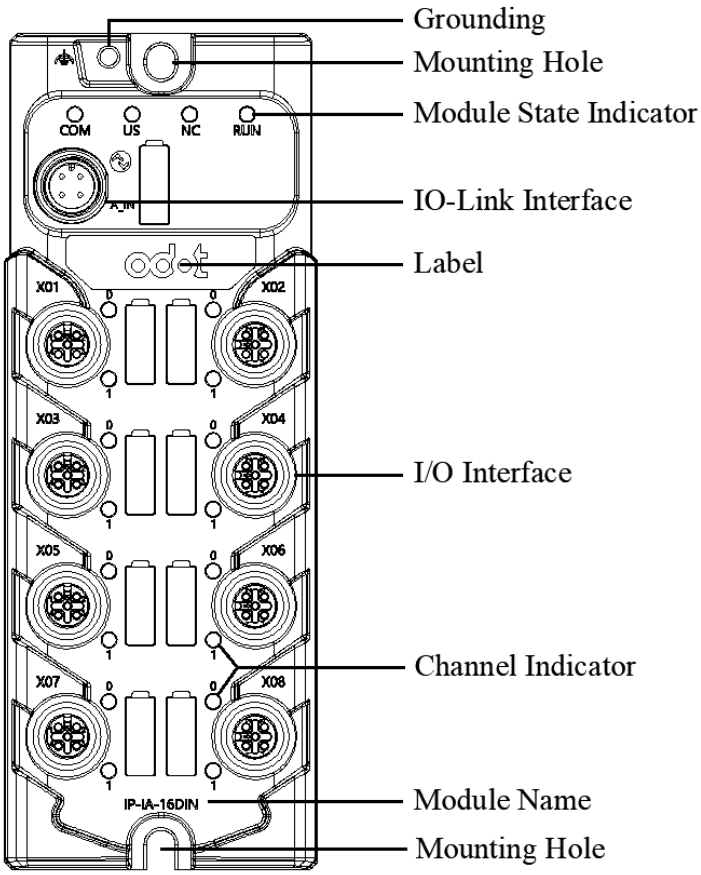

3.1 LED Indicator Definition

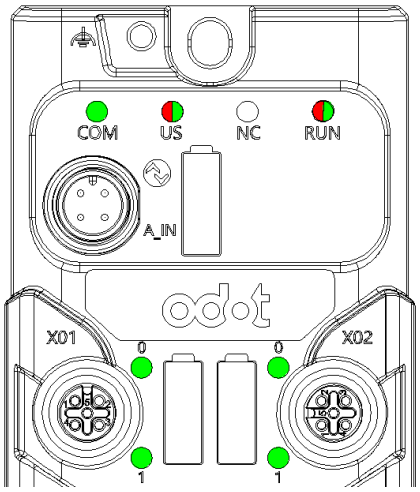

Us Power indicator (Red/ Green)	Description
ON (Green)	Us Power supply is normal
ON (Red)	Us Power supply overvoltage
Flash (Red)	Us Power supply undervoltage
RUN Network running indicator (Red/Green)	Description
Slow flash (Green)	IDLE mode
ON (Orange)	DS error
ON (Green)	Module works normally
ON (Red)	Module has an exception affecting the channel
Slow flash (Red)	IO-Link offline mode
COM indicator (Green)	Description
ON	IDLE mode
Slow flash	Module works normally
0-15 channel indicator (Green)	Description
ON	The channel data is effective
OFF	The channel data is ineffective

3.2 Port Definition

IO-Link port pin definition

Port Schematic Diagram	Pin	Mark	Description
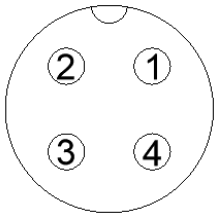	1	24V	Positive of system power (Us)
	2	24V	Positive of auxiliary power supply (Ua)
	3	0V	GND
	4	C/Q	IO-Link data transmission

IO port pin definition (X01~X08)

Port Schematic Diagram	Pin	Mark	Description
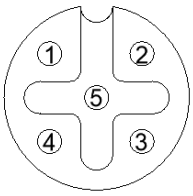	1	24V	Positive of power output, with Us
	2	Signal 1	Digital input (DI)
	3	0V	GND
	4	Signal 2	Digital input (DI)
	5	FG	Functional grounding

3.3 Wirring

DI device –Low level input (NPN)

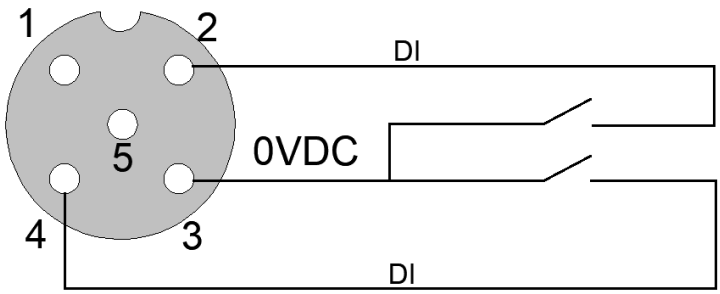

4 Configuration Parameter

Index 0x63 (99)—Subindex 0x00

ISDU								
Bit No	Bit 7	Bit 6	Bit 5	Bit 4	Bit 3	Bit 2	Bit 1	Bit 0
Byte 0	Reserved						Com BaudRate Select	

Com BaudRate Select: COM rate setting (default: 2, manual reset after setting).

1: COM1 (4.8kbps)

2: COM2 (38.4kbps)

3: COM3 (230.4kbps)

Index 0x65 (101)—Subindex 0x00

ISDU								
Bit No	Bit 7	Bit 6	Bit 5	Bit 4	Bit 3	Bit 2	Bit 1	Bit 0
Byte 0	Input Holding Time(ms)							

Input Holding Time(ms): Input holding time (default: 0).

0: Disable

1: 200ms

2: 500ms

3: 1000ms

4: 1500ms

5: 2000ms

6: 3000ms

7: 5000ms

Index 0x66（102）—Subindex 0x00

ISDU								
Bit No	Bit 7	Bit 6	Bit 5	Bit 4	Bit 3	Bit 2	Bit 1	Bit 0
Byte 0	Input Filtering Time(ms)							
Byte 1								

Input Filtering Time(ms): Filtering time (default: 10ms)

5 Process Data Definition

Input data								
Bit No	Bit 7	Bit 6	Bit 5	Bit 4	Bit 3	Bit 2	Bit 1	Bit 0
Byte 0	DI CH#7	DI CH#6	DI CH#5	DI CH#4	DI CH#3	DI CH#2	DI CH#1	DI CH#0
Byte 1	DI CH#15	DI CH#14	DI CH#13	DI CH#12	DI CH#11	DI CH#10	DI CH#9	DI CH#8

Data description:

DI CH#(0-15): When the bit is 1, the corresponding channel input signal is valid, and when it is 0, the input is invalid.

0: The input signal is invalid

1: The input value is valid

General event

Event code	Event type	Event name
0x18FF	Warning	DS error
0x8CA0	Warning	US overvoltage
0x8CA1	Warning	US undervoltage
0x8CA2	Warning	UA error

6 Dimension

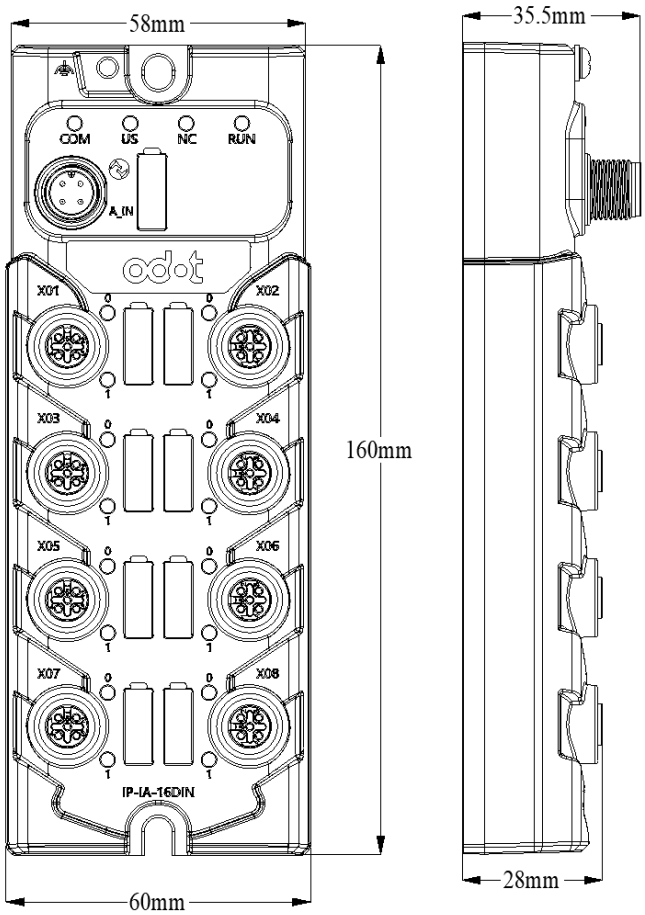
58mm
35.5mm
COM
US
NC
RUN
A_IN
X01
X02
X03
X04
X05
X06
X07
X08
160mm
IP-IA-16DIN
60mm
28mm

IP-IO-16DIPDOP IO-Link Slave/ 16 Channels Digital Input /Output (PNP)

1 Module Features

- Support the Data Storage function;
- Support 16 channels digital input/output configurable;
- Support the input holding function (Keep the read input value unchanged for a certain period of time);
- Support configurable filter time;

2 Technical Parameter

IO-Link Communication Protocol	
Protocol Standard	IO-Link V1.1 slave protocol
Transfer Rate	Default: COM2 (38.4kbps)
Communication Port	
Port Definition	M12 A-code 4 Pin, needle end Pin1: 24V(Us), the positive of system power Pin2: 24V(Ua), the positive of field power Pin3: 0V(GND) Pin4: C/Q
Us Power Supply Rated Voltage	24VDC
Ua Power Supply Rated Voltage	24VDC
Us/Ua Galvanic Isolation	Not support
Module Consumption	Max.50mA@24VDC
IO Port	
Quantity	8 ports, each containing two DI or DO, for a total of 16 digital input or output (configurable) (M12, A-code, 5 Pin, hole end)
Terminal Type	8×M12, hole end
Port Definition	Pin1: 24V, positive of power output, provide by Us Pin2: Signal 1, digital input/output Pin3: 0V Pin4: Signal 2, digital input/output Pin5: FG, functional grounding
Digital Input	
Channel Indicator	Support, green
Input Feature	Type 3, high level is valid (PNP)
Rated Voltage	24VDC
Signal “0”	-5~+30V (Us power rail)
Signal “1”	+11~+30V (Us power rail)
Minimum Voltage	-30VDC
Maximum Voltage	+30VDC
Input Current	2.5mA (for the signal “1”, rated voltage input)
Input Delay	OFF to ON: Max.500μs ON to OFF: Max. 500μs
Between Channels	The potential is not isolated
Filter	Configurable
Digital Output	
Channel Indicator	Support, green
Output Type	PNP, High level
Load Capacity	Resistive load: 0.5A Inductive load: 12W Lamp load: 5W
Rated Output Current of Pin 1	350mA (single channel)
Output Current of Module	Max.3.6A
Minimum Load Resistance	48Ω
Residual Current	Max.10μA (for signal “0”)

Output Delay	OFF to ON: Max.100μs ON to OFF: Max. 200μs
Switch Frequency	Rated power resistive load: COM1: 10Hz; COM2: 35Hz; COM3: 80Hz; Rated power inductive load: COM1/COM2/COM3: 2.5Hz; Rated power lamp load: COM1: 10Hz; COM2: 12.5Hz; COM3: 12.5Hz;
Potential Isolation	No isolation between channels
Diagnosis Function	
Status Display	Power indicator, running state, communication state, running error indicator
Diagnosis Function	Communication diagnosis
Us power anti-reverse protection	Support
Us power overvoltage detection	Support, Us>30VDC triggered
Us power undervoltage detection	Support, 9VDC≤Us≤18VDC triggered
Dimension	
Dimension	160 mm*60 mm*35.5 mm
Configuration Parameter	
Master Configuration	Support
Software Configuration	Support

3 Hardware Description

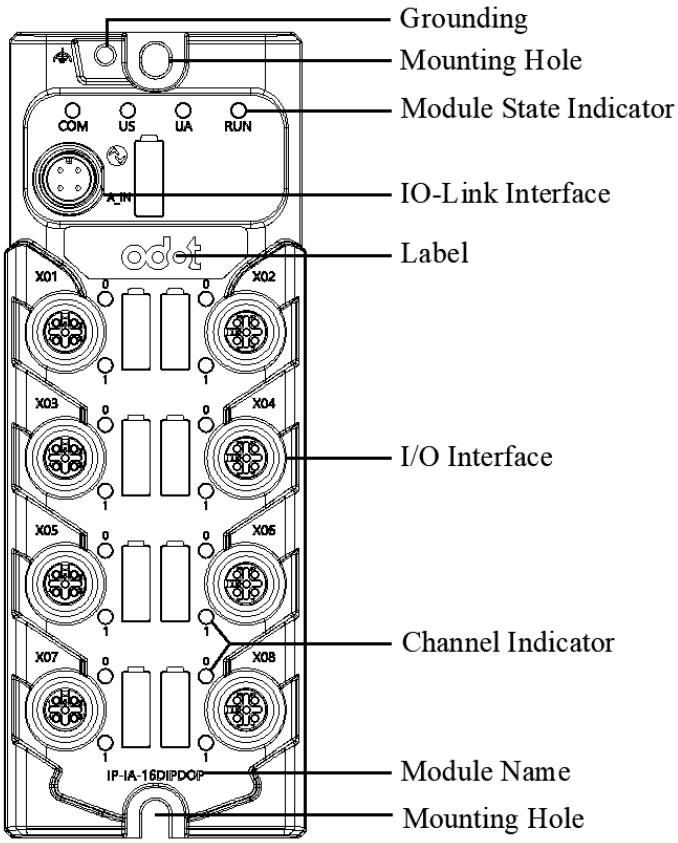

3.1 LED Indicator Definition

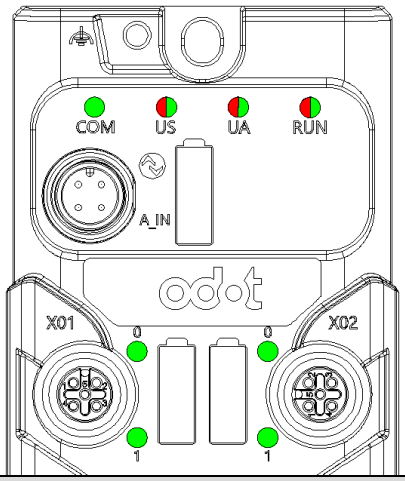

Us Power indicator (Red/ Green)	Description
ON (Green)	Us Power supply is normal
ON (Red)	Us Power supply overvoltage
Flash (Red)	Us Power supply undervoltage
Ua Power indicator (Red/ Green)	Description
ON (Green)	Ua Power supply is normal
ON (Red)	Ua Power supply overvoltage
Flash (Red)	Ua Power supply undervoltage
RUN Network running indicator (Red/Green)	Description
Slow flash (Green)	IDLE mode
ON (Orange)	DS error
ON (Green)	Module works normally
ON (Red)	Module has an exception affecting the channel
Slow flash (Red)	IO-Link offline mode
COM indicator (Green)	Description
ON	Pre-operation mode
Slow flash	Module works normally
0-15 channel indicator (Green)	Description
ON	The channel data is effective
OFF	The channel data is ineffective

3.2 Port Definition

IO-Link port pin definition

Port Schematic Diagram	Pin	Mark	Description
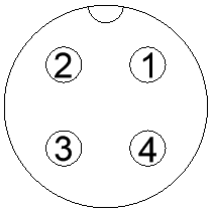	1	24V	Positive of system power (Us)
	2	24V	Positive of auxiliary power supply (Ua)
	3	0V	GND
	4	C/Q	IO-Link data transmission

IO port pin definition (X01~X08)

Port Schematic Diagram	Pin	Mark	Description
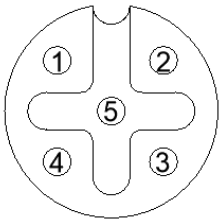	1	24V	Positive of power output, with Us
	2	Signal 1	Digital input/output (DI/DO), configurable
	3	0V	GND
	4	Signal 2	Digital input/output (DI/DO), configurable
	5	FG	Functional grounding

3.3 Wirring

1. DI device –High level input (PNP)

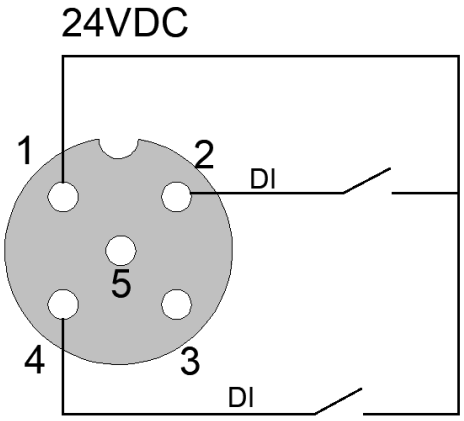

2. DO device –High level output (PNP)

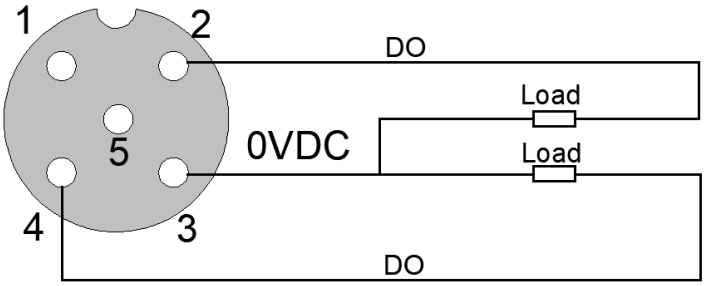

4 Configuration Parameter

Index 0x63 (99)—Subindex 0x00

ISDU								
Bit No	Bit 7	Bit 6	Bit 5	Bit 4	Bit 3	Bit 2	Bit 1	Bit 0
Byte 0	Reserved						Com BaudRate Select	

Com BaudRate Select: COM rate setting (default: 2, manual reset after setting).

1: COM1 (4.8kbps)

2: COM2 (38.4kbps)

3: COM3 (230.4kbps)

Index 0x64 (100)—Subindex 0x00

Configuration parameter								
Bit No	Bit 7	Bit 6	Bit 5	Bit 4	Bit 3	Bit 2	Bit 1	Bit 0
Byte 0	Port Function CH#7	Port Function CH#6	Port Function CH#5	Port Function CH#4	Port Function CH#3	Port Function CH#2	Port Function CH#1	Port Function CH#0
Byte 1	Port Function CH#15	Port Function CH#14	Port Function CH#13	Port Function CH#12	Port Function CH#11	Port Function CH#10	Port Function CH#9	Port Function CH#8

Subindex 0x01-0x10 (1-16)

Counter Reset CH #(0~15): channel function selection (default: 1).

0: Output

1: Input

Index 0x65 (101) —Subindex 0x00

ISDU								
Bit No	Bit 7	Bit 6	Bit 5	Bit 4	Bit 3	Bit 2	Bit 1	Bit 0
Byte 0	Input Holding Time(ms)							

Input Holding Time(ms): Input holding time (default: 0).

0: Disable

1: 200ms

2: 500ms

3: 1000ms

4: 1500ms

5: 2000ms

6: 3000ms

7: 5000ms

Index 0x66(102) --- Subindex 0x00

ISDU								
Bit No	Bit 7	Bit 6	Bit 5	Bit 4	Bit 3	Bit 2	Bit 1	Bit 0
Byte 0	Input Filtering Time(ms)							
Byte 1								

Input Filtering Time(ms): Filtering time (default: 10ms).

Index 0x67(103) --- Subindex 0x00

Configuration parameter								
Bit No	Bit 7	Bit 6	Bit 5	Bit 4	Bit 3	Bit 2	Bit 1	Bit 0
Byte 0	Fault Action for Output (CH 7)	Fault Action for Output (CH 6)	Fault Action for Output (CH 5)	Fault Action for Output (CH 4)	Fault Action for Output (CH 3)	Fault Action for Output (CH 2)	Fault Action for Output (CH 1)	Fault Action for Output (CH 0)
Byte 1	Fault Action for Output (CH 15)	Fault Action for Output (CH 14)	Fault Action for Output (CH 13)	Fault Action for Output (CH 12)	Fault Action for Output (CH 11)	Fault Action for Output (CH 10)	Fault Action for Output (CH 9)	Fault Action for Output (CH 8)

Subindex 0x01-0x10（1-16）

Fault Action For Output (CH0-CH15): Fault output mode, when the IO module detects an internal bus anomaly and fails to communicate with the adapter and enters SIO mode, the output data is processed in this way (default: 0).

0: Holding the last output

1: Output the fault value

Index 0x68（104） —Subindex 0x00

Input data								
Bit No	Bit 7	Bit 6	Bit 5	Bit 4	Bit 3	Bit 2	Bit 1	Bit 0
Byte 0	Fault Value for Output (CH 7)	Fault Value for Output (CH 6)	Fault Value for Output (CH 5)	Fault Value for Output (CH 4)	Fault Value for Output (CH 3)	Fault Value for Output (CH 2)	Fault Value for Output (CH 1)	Fault Value for Output (CH 0)
Byte 1	Fault Value for Output (CH 15)	Fault Value for Output (CH 14)	Fault Value for Output (CH 13)	Fault Value for Output (CH 12)	Fault Value for Output (CH 11)	Fault Value for Output (CH 10)	Fault Value for Output (CH 9)	Fault Value for Output (CH 8)

Fault Value for Output (CH0-15): When the fault output mode is 1, this bit sets the fault output value, and when the IO module internal bus is offline, this setting value is output (default: 0).

0: Output 0

1: Output 1

5 Process Data Definition

Input data								
Bit No	Bit 7	Bit 6	Bit 5	Bit 4	Bit 3	Bit 2	Bit 1	Bit 0
Byte 0	DI CH#7	DI CH#6	DI CH#5	DI CH#4	DI CH#3	DI CH#2	DI CH#1	DI CH#0
Byte 1	DI CH#15	DI CH#14	DI CH#13	DI CH#12	DI CH#11	DI CH#10	DI CH#9	DI CH#8

Data description:

DI CH#(0-15): When the bit is 1, the corresponding channel input signal is valid, and when it is 0, the input is invalid.

0: The input signal is invalid

1: The input value is valid

Output data								
Bit No	Bit 7	Bit 6	Bit 5	Bit 4	Bit 3	Bit 2	Bit 1	Bit 0
Byte 0	DO CH#7	DO CH#6	DO CH#5	DO CH#4	DO CH#3	DO CH#2	DO CH#1	DO CH#0
Byte 1	DO CH#15	DO CH#14	DO CH#13	DO CH#12	DO CH#11	DO CH#10	DO CH#9	DO CH#8

Data description:

DO CH#(0-15): When the bit is 1, the output signal of the corresponding channel is valid, and when it is 0, the output is invalid.

0: The output signal is invalid

1: The output signal is valid

General event

Event code	Event type	Event name
0x18FF	Warning	DS error
0x8CA0	Warning	US overvoltage
0x8CA1	Warning	US undervoltage
0x8CA2	Warning	UA error

6 Dimension

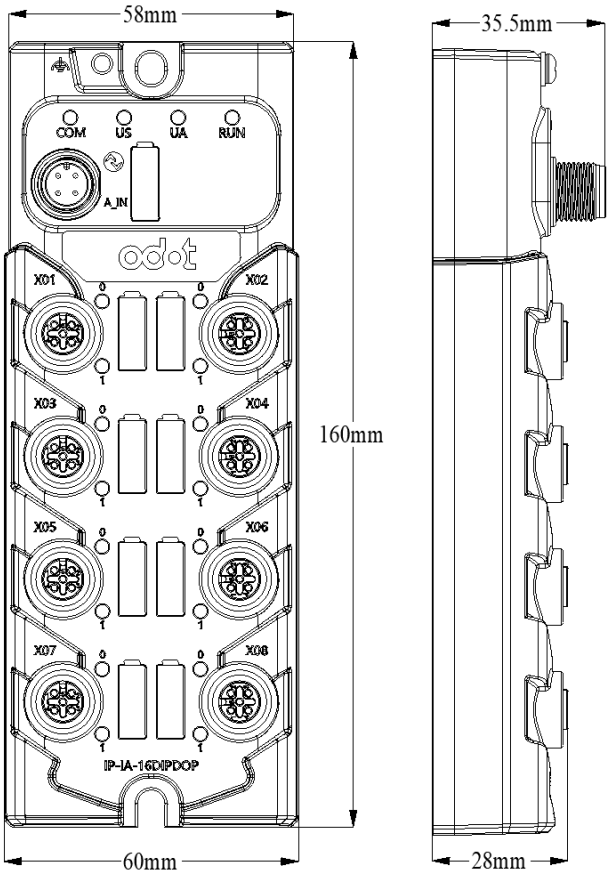
58mm
35.5mm
COM
US
UA
RUN
A_IN
X01
X02
X03
X04
X05
X06
X07
X08
160mm
IP-IA-16DIPDOP
60mm
28mm

IP-IO-16DINDON IO-Link Slave/ 16 Channels Digital Input/Output (NPN)

1 Module Features

- Support the Data Storage function;
- Support 16 channels digital input/output configurable;
- Support the input holding function (Keep the read input value unchanged for a certain period of time);
- Support configurable filter time;

2 Technical Parameter

IO-Link Communication Protocol	
Protocol Standard	IO-Link V1.1 slave protocol
Transfer Rate	Default: COM2 (38.4kbps)
Communication Port	
Port Definition	M12 A-code 4 Pin, needle end Pin1: 24V(Us), the positive of system power Pin2: 24V(Ua), the positive of field power Pin3: 0V(GND) Pin4: C/Q
Us Power Supply Rated Voltage	24VDC
Ua Power Supply Rated Voltage	24VDC
Us/Ua Galvanic Isolation	Not support
Module Consumption	Max.50mA@24VDC
IO Port	
Quantity	8 ports, each containing two DI or DO, for a total of 16 digital input or output (configurable) (M12, A-code, 5 Pin, hole end)
Terminal Type	8×M12, hole end
Port Definition	Pin1: 24V, positive of power output, provide by Us Pin2: Signal 1, digital input/output Pin3: 0V Pin4: Signal 2, digital input/output Pin5: FG, functional grounding
Digital Input	
Channel Indicator	Support, green
Input Feature	Type 3, low level is valid (NPN)
Rated Voltage	24VDC
Signal “0”	-5~+30V (Us power rail)
Signal “1”	+11~+30V (Us power rail)
Minimum Voltage	-30VDC
Maximum Voltage	+5VDC
Input Current	2.5mA (for the signal “1”, rated voltage input)
Input Delay	OFF to ON: Max.500μs ON to OFF: Max. 500μs
Between Channels	The potential is not isolated
Filter	Configurable
Digital Output	
Channel Indicator	Support, green
Output Type	PNP, High level
Load Capacity	Resistive load: 0.5A Inductive load: 12W Lamp load: 5W
Rated Output Current of Pin 1	350mA (single channel)
Output Current of Module	Max.3.6A
Minimum Load Resistance	48Ω
Residual Current	Max.10μA (for signal “0”)

Output Delay	OFF to ON: Max.100μs ON to OFF: Max. 200μs
Switch Frequency	Rated power resistive load: COM1: 10Hz; COM2: 35Hz; COM3: 80Hz; Rated power inductive load: COM1/COM2/COM3: 2.5Hz; Rated power lamp load: COM1: 10Hz; COM2: 12.5Hz; COM3: 12.5Hz;
Potential Isolation	No isolation between channels
Diagnosis Function	
Status Display	Power indicator, running state, communication state, running error indicator
Diagnosis Function	Communication diagnosis
Us power anti-reverse protection	Support
Us power overvoltage detection	Support, Us>30VDC triggered
Us power undervoltage detection	Support, 9VDC≤Us≤18VDC triggered
Dimension	
Dimension	160 mm*60 mm*35.5 mm
Configuration Parameter	
Master Configuration	Support
Software Configuration	Support

3 Hardware Description

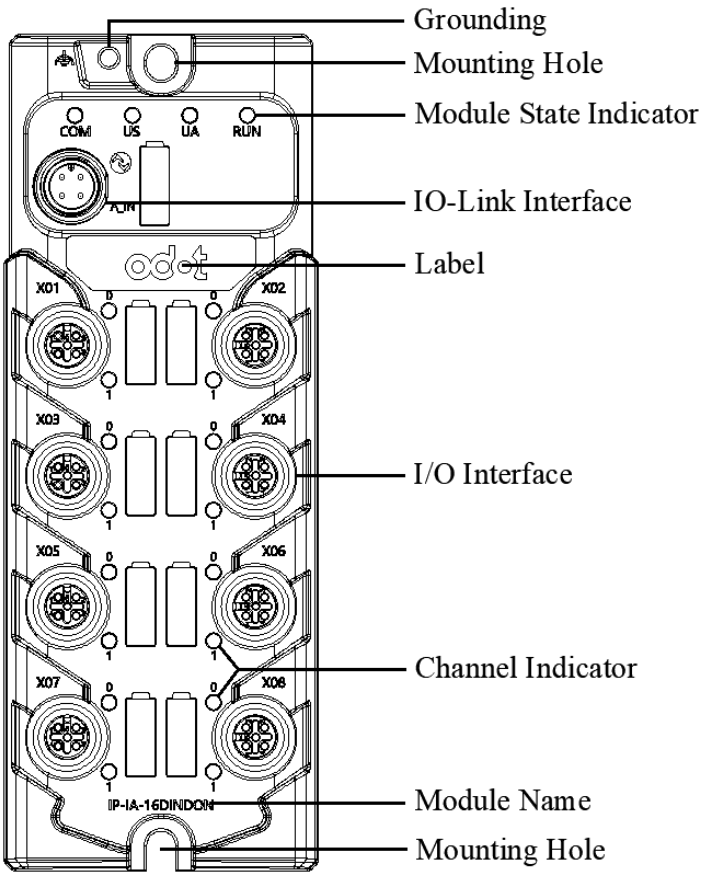

3.1 LED Indicator Definition

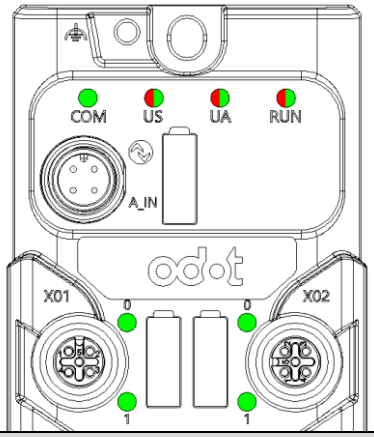

Us Power indicator (Red/ Green)	Description
ON (Green)	Us Power supply is normal
ON (Red)	Us Power supply overvoltage
Flash (Red)	Us Power supply undervoltage
Ua Power indicator (Red/ Green)	Description
ON (Green)	Ua Power supply is normal
ON (Red)	Ua Power supply overvoltage
Flash (Red)	Ua Power supply undervoltage
RUN Network running indicator (Red/Green)	Description
Slow flash (Green)	IDLE mode
ON (Orange)	DS error
ON (Green)	Module works normally
ON (Red)	Module has an exception affecting the channel
Slow flash (Red)	IO-Link offline mode
COM indicator (Green)	Description
ON	Pre-operation mode
Slow flash	Module works normally
0-15 channel indicator (Green)	Description
ON	The channel data is effective
OFF	The channel data is ineffective

3.2 Port Definition

IO-Link port pin definition

Port Schematic Diagram	Pin	Mark	Description
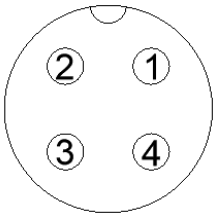	1	24V	Positive of system power (Us)
	2	24V	Positive of auxiliary power supply (Ua)
	3	0V	GND
	4	C/Q	IO-Link data transmission

IO port pin definition (X01~X08)

Port Schematic Diagram	Pin	Mark	Description
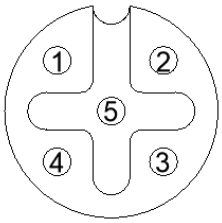	1	24V	Positive of power output, with Us
	2	Signal 1	Digital input/output (DI/DO), configurable
	3	0V	GND
	4	Signal 2	Digital input/output (DI/DO), configurable
	5	FG	Functional grounding

3.3 Wirring

1. DI device–Low level input (NPN)

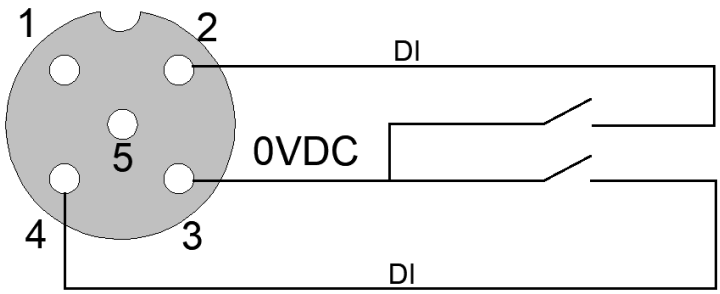

2. DO device –Low level output (NPN)

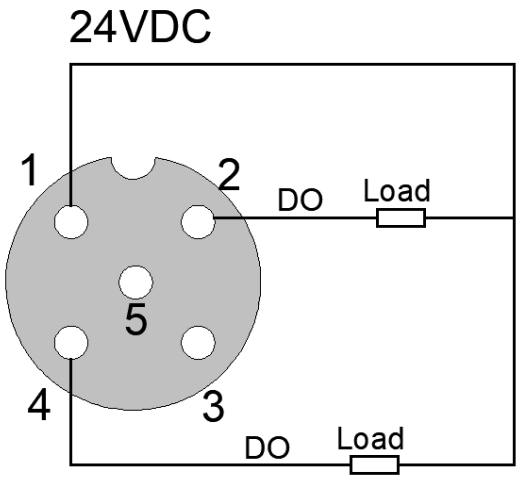

4 Configuration Parameter

Index 0x63 (99)—Subindex 0x00

ISDU								
Bit No	Bit 7	Bit 6	Bit 5	Bit 4	Bit 3	Bit 2	Bit 1	Bit 0
Byte 0	Reserved						Com BaudRate Select	

Com BaudRate Select: COM rate setting (default: 2, manual reset after setting).

1: COM1 (4.8kbps)

2: COM2 (38.4kbps)

3: COM3 (230.4kbps)

Index 0x64 (100)—Subindex 0x00

Configuration parameter								
Bit No	Bit 7	Bit 6	Bit 5	Bit 4	Bit 3	Bit 2	Bit 1	Bit 0
Byte 0	Port Function CH#7	Port Function CH#6	Port Function CH#5	Port Function CH#4	Port Function CH#3	Port Function CH#2	Port Function CH#1	Port Function CH#0
Byte 1	Port Function CH#15	Port Function CH#14	Port Function CH#13	Port Function CH#12	Port Function CH#11	Port Function CH#10	Port Function CH#9	Port Function CH#8

Subindex 0x01-0x10 (1-16)

Counter Reset CH #(0~15): channel function selection (default: 1).

0: Output

1: Input

Index 0x65 (101) —Subindex 0x00

ISDU								
Bit No	Bit 7	Bit 6	Bit 5	Bit 4	Bit 3	Bit 2	Bit 1	Bit 0
Byte 0	Input Holding Time(ms)							

Input Holding Time(ms): Input holding time (default: 0).

0: Disable

1: 200ms

2: 500ms

3: 1000ms

4: 1500ms

5: 2000ms

6: 3000ms

7: 5000ms

Index 0x66(102) --- Subindex 0x00

ISDU								
Bit No	Bit 7	Bit 6	Bit 5	Bit 4	Bit 3	Bit 2	Bit 1	Bit 0
Byte 0	Input Filtering Time(ms)							
Byte 1								

Input Filtering Time(ms): Filtering time (default: 10ms).

Index 0x67(103) --- Subindex 0x00

Configuration parameter								
Bit No	Bit 7	Bit 6	Bit 5	Bit 4	Bit 3	Bit 2	Bit 1	Bit 0
Byte 0	Fault Action for Output (CH 7)	Fault Action for Output (CH 6)	Fault Action for Output (CH 5)	Fault Action for Output (CH 4)	Fault Action for Output (CH 3)	Fault Action for Output (CH 2)	Fault Action for Output (CH 1)	Fault Action for Output (CH 0)
Byte 1	Fault Action for Output (CH 15)	Fault Action for Output (CH 14)	Fault Action for Output (CH 13)	Fault Action for Output (CH 12)	Fault Action for Output (CH 11)	Fault Action for Output (CH 10)	Fault Action for Output (CH 9)	Fault Action for Output (CH 8)

Subindex 0x01-0x10（1-16）

Fault Action For Output (CH0-CH15): Fault output mode, when the IO module detects an internal bus anomaly and fails to communicate with the adapter and enters SIO mode, the output data is processed in this way (default: 0).

0: Holding the last output

1: Output the fault value

Index 0x68（104） —Subindex 0x00

Input data								
Bit No	Bit 7	Bit 6	Bit 5	Bit 4	Bit 3	Bit 2	Bit 1	Bit 0
Byte 0	Fault Value for Output (CH 7)	Fault Value for Output (CH 6)	Fault Value for Output (CH 5)	Fault Value for Output (CH 4)	Fault Value for Output (CH 3)	Fault Value for Output (CH 2)	Fault Value for Output (CH 1)	Fault Value for Output (CH 0)
Byte 1	Fault Value for Output (CH 15)	Fault Value for Output (CH 14)	Fault Value for Output (CH 13)	Fault Value for Output (CH 12)	Fault Value for Output (CH 11)	Fault Value for Output (CH 10)	Fault Value for Output (CH 9)	Fault Value for Output (CH 8)

Fault Value for Output (CH0-15): When the fault output mode is 1, this bit sets the fault output value, and when the IO module internal bus is offline, this setting value is output (default: 0).

0: Output 0

1: Output 1

5 Process Data Definition

Input data								
Bit No	Bit 7	Bit 6	Bit 5	Bit 4	Bit 3	Bit 2	Bit 1	Bit 0
Byte 0	DI CH#7	DI CH#6	DI CH#5	DI CH#4	DI CH#3	DI CH#2	DI CH#1	DI CH#0
Byte 1	DI CH#15	DI CH#14	DI CH#13	DI CH#12	DI CH#11	DI CH#10	DI CH#9	DI CH#8

Data description:

DI CH#(0-15): When the bit is 1, the corresponding channel input signal is valid, and when it is 0, the input is invalid.

0: The input signal is invalid

1: The input value is valid

Output data								
Bit No	Bit 7	Bit 6	Bit 5	Bit 4	Bit 3	Bit 2	Bit 1	Bit 0
Byte 0	DO CH#7	DO CH#6	DO CH#5	DO CH#4	DO CH#3	DO CH#2	DO CH#1	DO CH#0
Byte 1	DO CH#15	DO CH#14	DO CH#13	DO CH#12	DO CH#11	DO CH#10	DO CH#9	DO CH#8

Data description:

DO CH#(0-15): When the bit is 1, the output signal of the corresponding channel is valid, and when it is 0, the output is invalid.

0: The output signal is invalid

1: The output signal is valid

General event

Event code	Event type	Event name
0x18FF	Warning	DS error
0x8CA0	Warning	US overvoltage
0x8CA1	Warning	US undervoltage
0x8CA2	Warning	UA error

6 Dimension

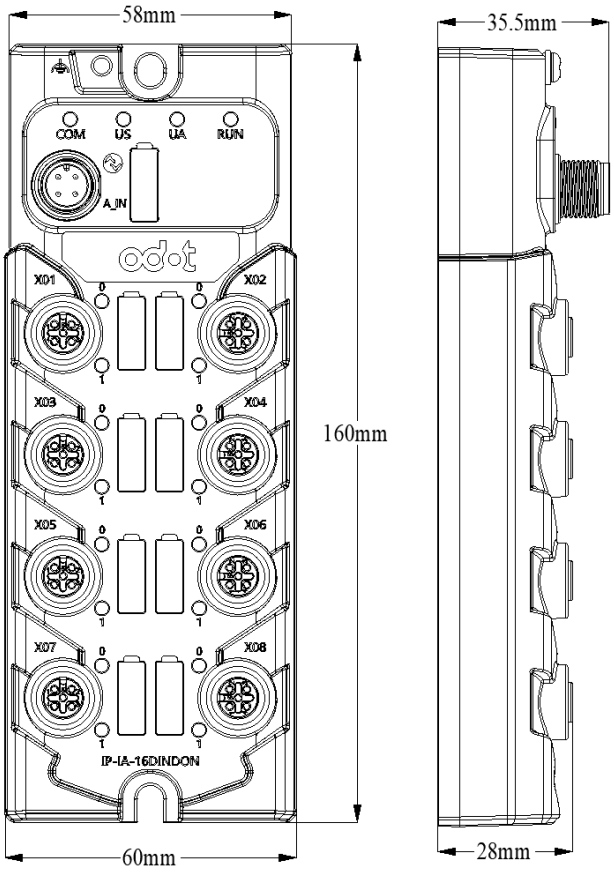
58mm
35.5mm
COM
US
UA
RUN
A_IN
X01
X02
X03
X04
X05
X06
X07
X08
160mm
IP-IA-16DINDON
60mm
28mm

Odot Automation System Co., Ltd.

Plant 204, Comprehensive Bonded Zone, No. 261, Feiyun Avenue, Mianyang,

Sichuan, China.

Tel: +86-0816-2538289

Zip Code: 621000

Email:sales@odotautomation.com

Web: www.odotautomation.com