The Sinolift self-lifting stacker represents a paradigm shift in the warehousing industry, promising enhanced efficiency, improved safety, and reduced operational costs. Its revolutionary design, adaptability, and intelligent features position it as the future of warehouse logistics. As more companies embrace this technology, we can expect to see a significant shift in the way goods are handled and stored, ultimately leading to a more streamlined and productive future. So, get ready to wave goodbye to manual lifting and welcome the self-lifting stacker into your warehouse – your productivity levels will thank you!

Performance	1.1	**Manufactuer**			SINOLIFT	
	1.2	Model no			SES10	SES12
	1.2	Power type			Electric	Electric
	1.3	Drive type			Pedestrain	Pedestrain
	1.4	Capacity	Q	kg	1000	1200
	1.5	Load centre	c	mm	400	400
Dimensions	3.1	Material of wheel			Polyurethane	Polyurethane
	3.2	Size of drive wheel		mm	Φ190x70	Φ190x70
	3.3	Size of balance roller		mm	Φ75X35	Φ75X35
	3.4	Size of load roller		mm	Φ80X70	Φ80X70
	3.5	Track width, Drive side	b11	mm	780	780
	3.6	Wheelbase	y	mm	980	980
Wheels	4.1	Lifti height	h3	mm	900/1100/1300/1500/1600	900/1100/1300/1500/1600
	4.2	Retracted height	h1	mm	1250/1450/1650/1850/1950	1250/1450/1650/1850/1950
	4.3	Vehicle height during operation	h4	mm	2080/2480/2880/3280/3480	2080/2480/2880/3280/3480
	4.4	Min fork height	h13	mm	85	85
	4.5	Overall length	l1	mm	1730	1730
	4.6	Overall width	b1	mm	920	920
	4.7	Fork size	s/e/l	mm	70/195/1200	70/195/1200
	4.8	Fork width	b5	mm	560/600	560/600
	4.9	Ground clearance	m2	mm	10	10
Identifications	5.1	Gradeability, loaden/unloaden		%	3/5	3/5
	5.2	Brake			Electromagnetic Brake	Electromagnetic Brake
	5.3	Power of drive motor		kw	0.75	0.75
	5.4	Power of lifting motor		kw	2	2
	5.5	Battery capacity (lithium)		V/Ah	48v/25ah (30AH As Option)	48v/25ah (30AH As Option)
	5.6	Weight of battery		kg	30	30
	5.7	Steering power			Mechanical	Mechanical

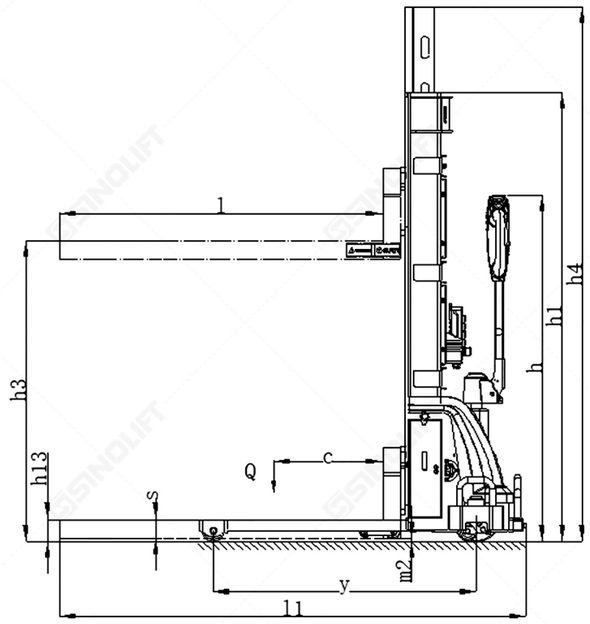

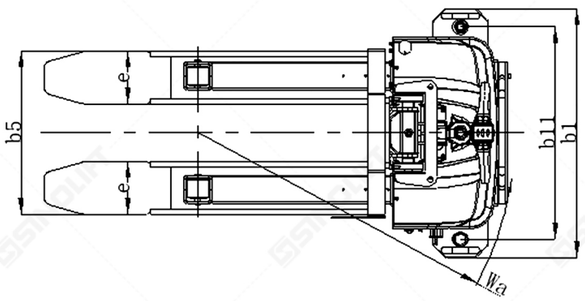

Spercial size of width and length can be made according to customer's requirement, All specifications and figures are subject to change withou notice for improvement.

SINOLIFT
For material handling

SES10 SES12

SELF LOADING STACKER
ISO9001
CE



SHANGHAI SINOLIFT MECHANICAL AND ELECTRICAL EQUIPMENT CO.,LTD

Address: No. 2471 Dachuan Road, Nanhui Industry Park, Pudong New District, Shanghai, 201399,P.R.China
Tel: 0086-21-68014500 or 0086-21-58003681
Fax: 0086-21-68014262
Website: www.sinolift.com www.sinoliftchina.com
Skype: sinolift
Whatsapp & Mobile: 0086 138 1757 2420



This project involves the development and deployment of a full electric self-loading stacker, provided by Sinolift corporate station China. The goal is to enhance the efficiency of material handling processes within industrial and warehouse settings by introducing an advanced, fully electric stacker that is capable of self-loading and unloading operations.

Electric Power System

The stacker is powered by a robust and environmentally friendly electric power system, reducing carbon emissions and operating costs.

Self-Loading Mechanism

Equipped with a self-loading mechanism, the stacker can autonomously load and unload materials, minimizing manual intervention and enhancing safety.

High Efficiency

Designed to handle heavy loads with precision, the stacker improves overall productivity in the warehouse by speeding up the material handling process.

User-Friendly Interface

The stacker includes an intuitive interface that allows operators to easily control and monitor the equipment, ensuring smooth operations.

Safety Features

Integrated safety features, such as automatic braking and load stability systems, ensure the safety of both the operators and the materials being handled.

Compact Design

The stacker's compact design allows it to operate in confined spaces, making it ideal for use in various industrial environments.











Lithium-ion Battery

The self loading stacker SES10 & SES12 was equipped with 48V / 25Ah(30Ah) lithium-ion battery. Battery is completely maintenance-free, so there is no need of checking and refilling water. Charging time is just 2.5 hours. In-built Battery Management System (BMS) is responsible for constant checking parameters and managing battery - it provides much longer life of battery. Its light self weight also help to transit the lift from stack to move.

Load and Unload Flow Route Diagram

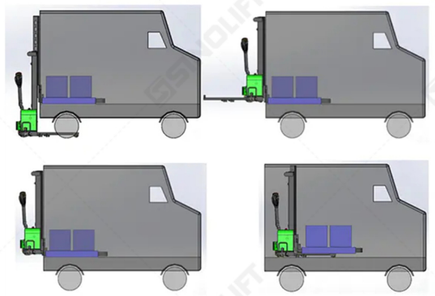

Implementation

Sinolift provided the stacker, ensuring it meets the specific requirements of the client. The project involved customizing the stacker's functionalities to suit the operational needs of the warehouse, followed by extensive testing to ensure reliability and safety. Training sessions were conducted for the staff to familiarize them with the new equipment, ensuring a smooth transition to the new system.

Outcomes

The deployment of the Full Electric Self-Loading Stacker resulted in a significant increase in operational efficiency, reduced labor costs, and improved safety standards in the warehouse. The project showcases the capability of Corporate Station Bangladesh to deliver advanced, tailored solutions for industrial automation.

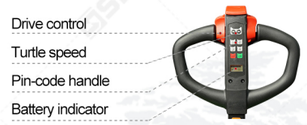



- In the fast-paced world of logistics and warehousing, finding innovative solutions to streamline operations is crucial. Enter the self-lifting stacker, a game-changing machine that promises to revolutionize the way goods are stored and transported. This cutting-edge technology combines efficiency, safety, and ease of use, making it the ideal choice for modern warehouses.
- Designed to increase productivity while minimizing physical strain, the self-lifting stacker is a versatile piece of machinery that eliminates the need for manual lifting.
- Equipped with advanced hydraulic systems, this stacker can effortlessly lift heavy loads, reducing the risk of workplace injuries.
- With its intuitive controls and ergonomic design, operators can easily maneuver the stacker, even in tight spaces.
- This not only improves efficiency but also saves valuable time, allowing warehouse staff to focus on more critical tasks.
- One of the standout features of the self-lifting stacker is its adaptability. Whether it's used for stacking pallets, transporting goods, or retrieving items from high shelves, this machine is up to the task. Its adjustable forks and mast height ensure compatibility with various storage systems, making it an excellent investment for warehouses with diverse needs.



Protective Gantry
Rack and pinion drive is more stable and longer life.



Magnetic Remote Control
Not easy to fall off, simple operation.



Multi-function Handle
Fully electrically operated,multi-function control handle with digital combination lock and power display.



Emergency Stop Button
Emergency stop switch, mounted on the top left side of the chassis, easy to operate.



Intelligent Control System
Equipped with CAN-BUS technology, automatically monitoring the status of the truck, and fault diagnosis.



High Quality Forks
High-quality fork support legs, telescopic, self-elevating.