| EC No. | EC Description | DR. |
|---|---|---|
| / | / | / |

1.6

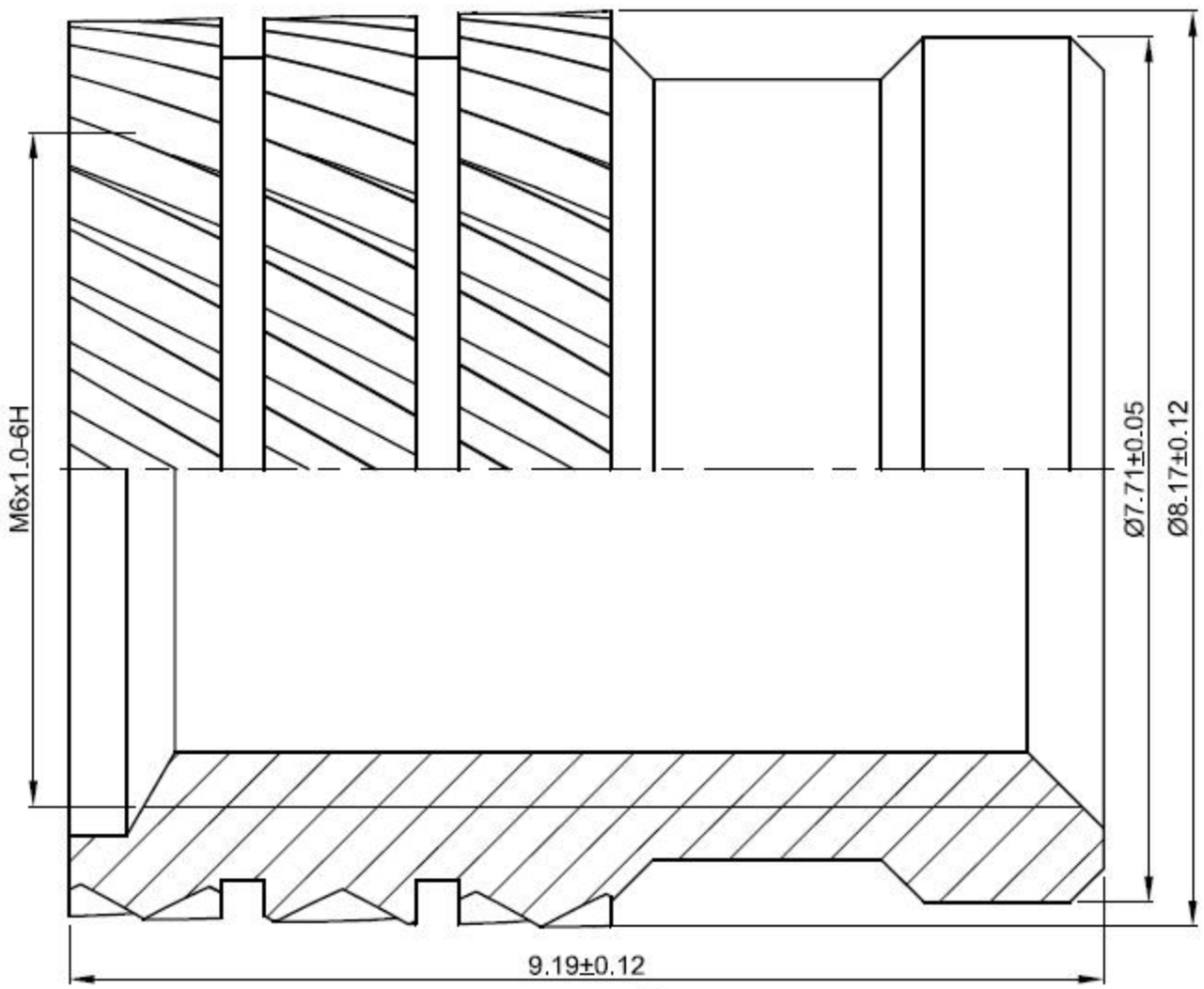


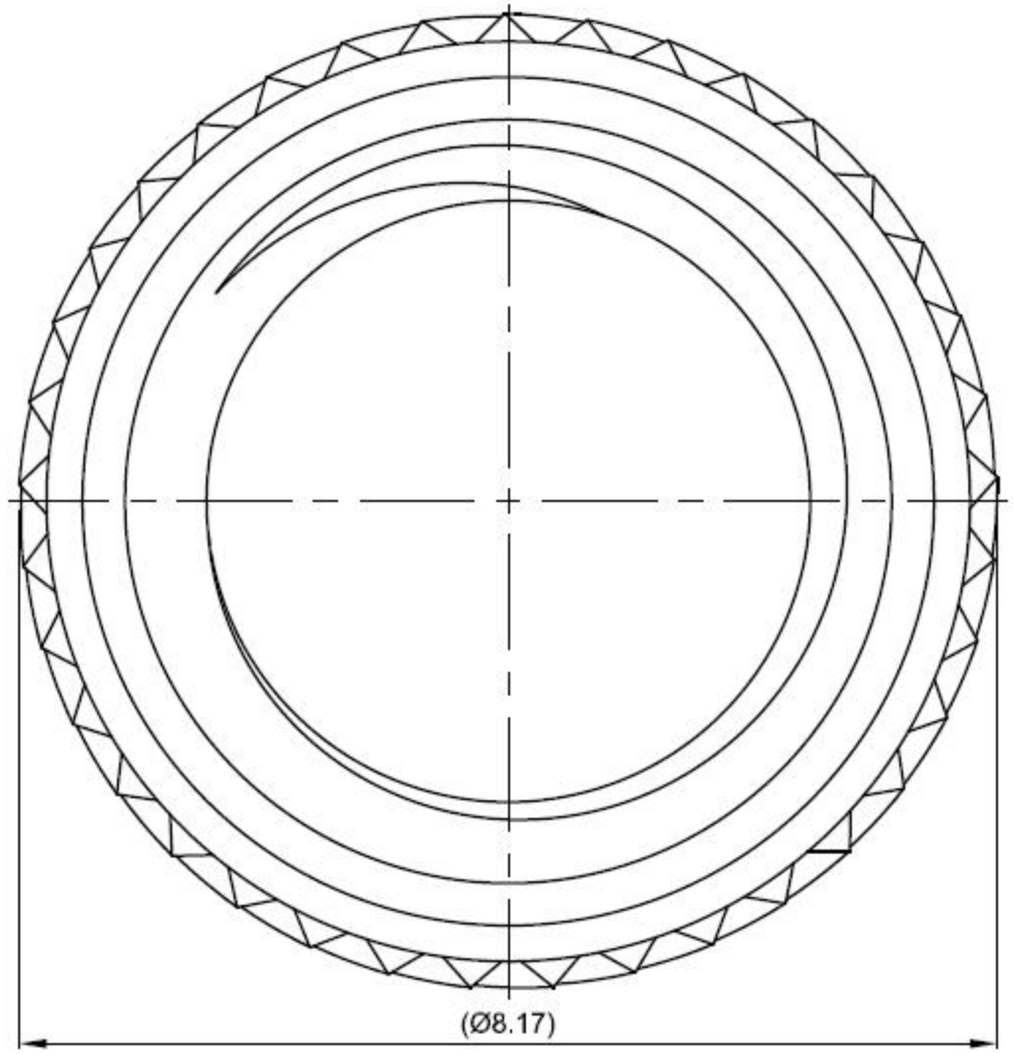


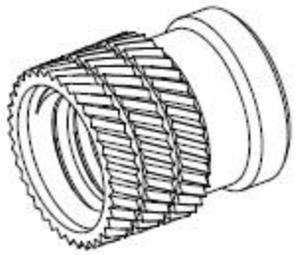

NOTES:
1. Material: Brass C3604;
2. Heat Treatment: None;
3. Surface Treatment: Cleaning;
4. Packaging: PE bag and Carton;
5. Remove all burrs and sharp edges;
6. Thread must be checked with Go/No Go Gauge;
7. Unless otherwise specified: ±0.1mm and angle ±2°.

**In-saiL®**

UNIT: mm

| DIM Tol.: | Angle Tol.: |
|---|---|
| X. ± | X°. ± |
| .X ± | .X° ± |
| .XX ± | .XX° ± |
| .XXX± | .XXX°± |

| ① | 1 | See Note 1 | / | See Note 3 | / | / |
|---|---|---|---|---|---|---|
| Part Item | QTY. | Material | Name | Surface Treatment | Description | REF. |
| DR. HRX 2010.12.18 | | CHKD. | APPD. | Unit net weight ≈ 1.55304 g | | Plot scale / |

Shenzhen In-saiL Precision Parts Co.,Ltd

The Drawing and Specification are the Property of Shenzhen In-saiL Precision Parts Co.,Ltd, Without the Prior Written Permission of Top Management, any person or party except the intended ones is prohibited to Copy, Reproduce, Duplicate this document, Please send email to sales@in-sail.com if you have any request.

TITLE: SP-M6x9.2-OD8.2

| Drawing#: | P/N: | Version | Sheet |
|---|---|---|---|
| LF238 | / | A | 1 of 1 |