AQUATIZ

Instruction manual
AQ1101
Smart Bidet Toilet Seat

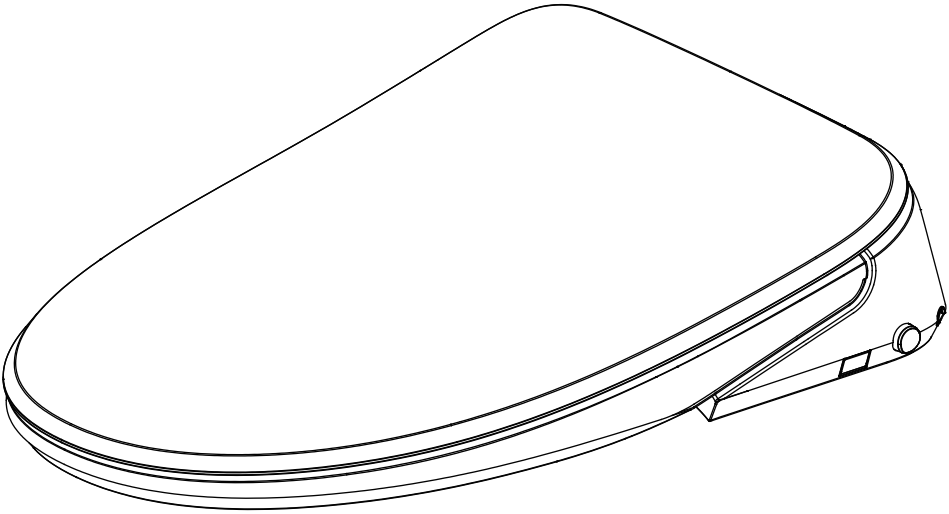

Rated voltage	Rated frequency	Rated power
220-240V	50-60Hz	1070-1140W
230V	50Hz	1080W

Waterproof: IPX4

WaterMark
WMTS-051
WMK26646

Please read this manual carefully before installing and using this product.
Keep this manual for future reference.

Content

1. Important Safeguards and Instructions 01
2. Parts Identification 03
3. Main Unit Knob Instructions 04
4. Technical Specification 05
5. Packing List 06
6. Product Dimension and Installation Tool 07
7. Installation of Main Unit 07
   Installation of Base Plate
   Installation and Disassembly of Main Unit
   Installation of Water Inlet Pipe and T Valve
8. Preparation 10
9. Maintenance 11
   Maintenance of Main Unit
   Nozzle Maintenance
   Filter Cleaning for Pressure-maintaining Valve
   Self-cleaning Waterway Maintenance
   Deodorizing Device Maintenance
   Disassembly and Installation of Clamp
10. Troubleshooting Guide 14
11. Warranty Terms 15

IMPORTANT SAFEGUARDS

When using electrical products, especially when children are present, basic safety precautions should always be followed, including the following:

1. The appliance is not to be used by persons (including children) with reduced physical, sensory or mental capabilities, or lack of experience and knowledge, unless they have been given supervision or instruction.
2. This appliance can be used by children aged from 8 years and above and persons with reduced physical, sensory or mental capabilities or lack of experience and knowledge if they have been given supervision or instruction concerning use of the appliance in a safe way and understand the hazards involved.
3. Children shall not play with the appliance.
4. Cleaning and user maintenance shall not be made by children without supervision.

READ ALL INSTRUCTIONS BEFORE USING

DANGER – To reduce the risk of electrocution:

1. Do not use while bathing.
2. Do not place or store product where it can fall or be pulled into a tub or sink.
3. Do not place in or drop into water or other liquid.
4. Do not reach for a product that has fallen into water. Unplug immediately.
5. Do not wash the main unit or electrical plug with water or detergent.
6. Do not handle the electrical plug with wet hands.
7. Do not put a hand or other materials over the outlet of air dryer or block the outlet of air dryer.
8. Never disassemble, repair or modify this product.
9. During installation, disassembly, repair and maintenance of the product, the power plug must be switched off and water supply be shut off.

WARNING – To reduce the risk of burns, electrocution, fire, or injury to persons.

1. Close supervision is necessary when this product is used by, on, or near children or individuals with disabilities.
2. Use this product only for its intended use as described in this manual. Do not use attachments not recommended by the manufacturer.
3. Never operate this product if it has a damaged cord or plug, if it is not working properly, if it has been dropped or damaged, or dropped into water. Return the product to a service center for examination and repair.
4. Keep the cord away from heated surfaces.
5. Never use while sleeping or drowsy.
6. Never drop or insert any object into any opening or hose.
7. Do not use outdoors or operate where aerosol (spray) products are being used or where oxygen is being administered.
8. Connect this product to a properly grounded outlet only. See Grounding Instructions.
9. Do not throw cigarettes and other burning materials into toilet, otherwise it might cause fire.
10. This product is an electric appliance, so it must be placed far away from water and other liquid.
11. Do not lay the product on its side or upside down during the electrical circuit.
12. It is prohibited to use other electric appliances in the same socket.
13. It is forbidden to use the power extension or unstable loose outlet.
14. Do not reuse any existing water supply hoses, otherwise it might cause leakage, fire or electrical shock. Installation of the bidet seat should include specified components and a new water supply hose.

IMPORTANT SAFETY INSTRUCTIONS

⚠ **CAUTION -** Indicates that failure to follow the instruction may cause body injury or property damage.

1. Do not install or use the product in wet places as steam room etc.
2. It is recommended to use water-proof electrical outlet which should be Installed in a place where is not easily to get wet.
3. This product should be used with 220V, 50Hz electrical current only, load current is at least 10A. Power plug must be equipped with ground fault circuit interrupter or ground fault electrical leakage protector or similar high sensitive, rapid type leakage switch (Rated sensitive current under 10mA).
4. When it thunders, it is strongly recommended to pull out the power plug.
5. Do not stand on ceramic toilet.
6. Ceramic toilet must install floor fixing bolts.
7. Do not stand on product unit, seat and cover.
8. Do not lean against the seat cover when using the product, to avoid damage.
9. This product is equipped with a soft-closing seat cover. Do not push the toilet seat closed, or damage may occur.
10. Do not use lacquer thinner, petrol, liquid medicine, detergent, insecticide, toilet cleanser and scrubbing brush to clean the product.
11. Exposure to direct sunlight is prohibited.
12. Only use tap water or potable water, otherwise it may cause chafing.
13. Do not connect water supply to heater outlet. Make sure inlet water temperature is between 3~35°C/37.4~95°F.
14. When the room temperature is under zero degree, please drain the water tank, to avoid freezing.
15. Raise room temperature to prevent the toilet from damage due to freezing.
16. When moving the product from cold or wet environment into normal room temperature, wait for 2 hours until the condensation water is fully volatilized. Doing so can prevent the product from electrical short-circuit.
17. When not using the product over three (3) days, drain the water out of the toilet and pull the electrical plug from the wall outlet.
18. Stop using the product and shut off the power when product malfunctions. Call for professional service.

GROUNDING INSTRUCTIONS

This product should be grounded. In the event of an electrical short circuit, grounding reduces the risk of electric shock by providing an escape wire for the electric current. This product is equipped with a cord having a grounding wire with a grounding plug. The plug must be plugged into an outlet that is properly installed and grounded.

⚠ **DANGER -** Improper use of the grounding plug can result in a risk of electric shock.

If repair or replacement of the cord or plug is necessary, do not connect the grounding wire to either flat blade terminal. The wire with insulation having an outer surface that is green with or without yellow stripes is the grounding wire.

This product is factory equipped with a specific electric cord and plug to permit connection to a proper electric circuit. Make sure that the product is connected to an outlet having the same configuration as the plug. No adapter should be used with this product. Do not modify the plug provided — if it will not fit the outlet, have the proper outlet installed by a qualified electrician. If the product must be reconnected for use on a different type of electric circuit, the reconnection should be made by qualified service personnel.

SAVE THESE INSTRUCTIONS

Parts Identification

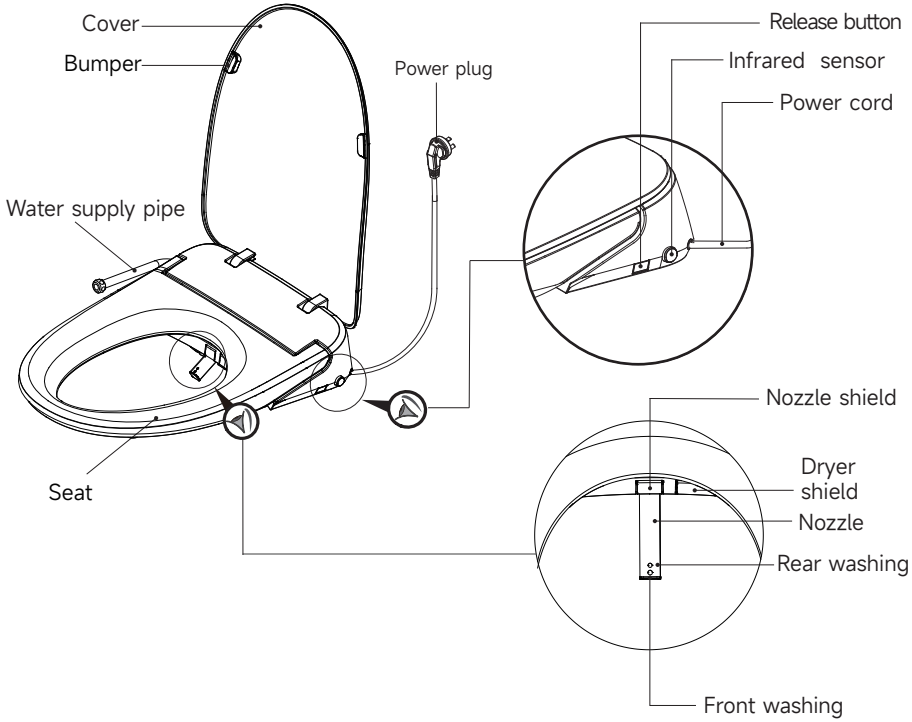

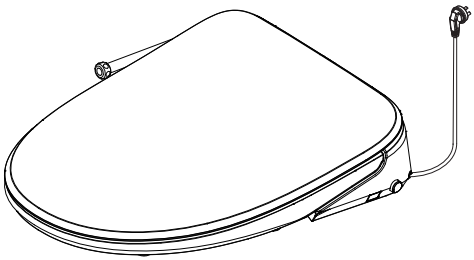

Whole set of product

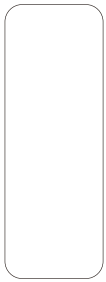

The remote control

Main Unit Knob Instructions (Knob Activation)

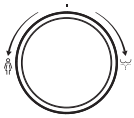	Back ← → Front
Rear Washing Knob	1. When seated, turn Rear Washing Knob clockwise to start rear washing function; Rear washing → Drying →Stop drying automatically. 2. During rear washing, turn the knob clockwise, the washing position moves forward, otherwise, the washing position moves backward.
Front Washing Knob	1. When seated, turn Front Washing Knob counterclockwise to start front washing function; Front washing → Drying →Stop drying automatically. 2. During front washing, turn the knob counterclockwise, the washing position moves backward, otherwise, the washing position moves forward.
Stop Knob	When seated, press the knob to stop any function currently in operation, including rear wash, front wash, drying, or nozzle cleaning.
Energy Saving Mode	When not seated, press the knob to activate Energy Saving Mode. Press the knob again to exit. · In this mode, the knob will display a soft breathing light effect. · The seat temperature will automatically be set to Level 1 to reduce power consumption. (Note: If the seat temperature was set to Neutral before entering Energy Saving Mode, it will remain at Neutral.) Remark: Energy Saving Mode will be temporarily disabled when the seat is occupied, and the product will switch to Function Mode. Seat heating will resume immediately without resetting the temperature. Once the seat is no longer in use, Energy Saving Mode will automatically reactivate.

Technical Specification

Main Unit	Rated voltage	220V-240V, 50Hz-60Hz	230V, 50Hz
	Rated power	1070-1140W	1080W
	Water pressure range	0.08MPa - 0.8MPa (Static pressure)	
	Power cord length	About 1.6m	
Cleaning device	Heating power	1600W	
	Water temperature	6-level adjustment	
	Water volume	5-level adjustment	
	Cleaning mode	Rear washing/Oscillating washing, Front washing/Oscillating washing	
	Nozzle position	5-level adjustment	
	Water pressure protector	Pressure maintaining device, Automatic pressure relief device	
	Anti-fouling device	Anti-syphon device, Anti-backflow device, Filter device	
	Safety device	Water temperature sensor, Dry heating protection, Thermal fuse, Ground protection, Thermostat, Anti-freezing and anti-cracking device	
Drying device	Warm air volume	Over $0.2m^3$/min	
	Warm air temperature	6-level adjustment	
	Heating power	200W	
	Safety device	Over-heating protection, Thermal fuse	
Deodorization	Deodorization method	Photocatalyst-free	
Heated seat	Surface temperature	6-level adjustment	
	Heating power	50W	
	Open and close device	Soft close	
	Burn protection	After 10 minutes of use, the seat temperature will automatically drop slowly to a low level	
	Safety device	Seat sensor, Temperature senor, Bimetallic thermostat, Thermal fuse	
Caring device	Night light assembly	Smart, Always on, Always off	
	Noise-free setting	The buzzer is off at night for a quite environment.	
	User ID setting	To avoid interference when used by multiple users	
Antibacterial site		Seat, Nozzle	

Packing List

The remote control assembly	1. Remote control	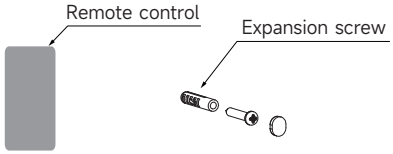
	2. Expansion screw	
Base plate assembly	1. Base plate	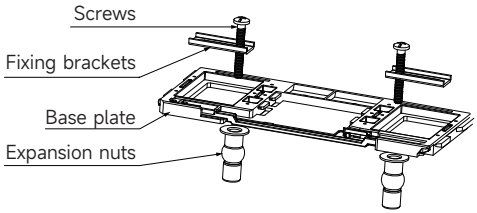
	2. Screws (2)	
	3. Fixing brackets (2)	
	4. Expansion nuts (2)	
Water supply assembly	1. T valve (1)	
	2. Dual Check Valve	
Manual, Mounting cardboard	1. Manual (including warranty card)	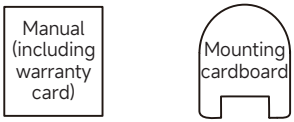
	2. Mounting cardboard	
Main unit		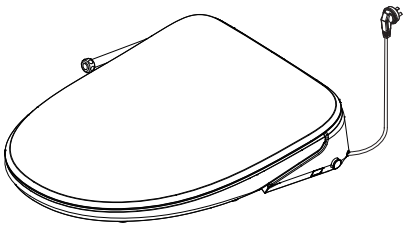

Product Dimension and Installation Tool

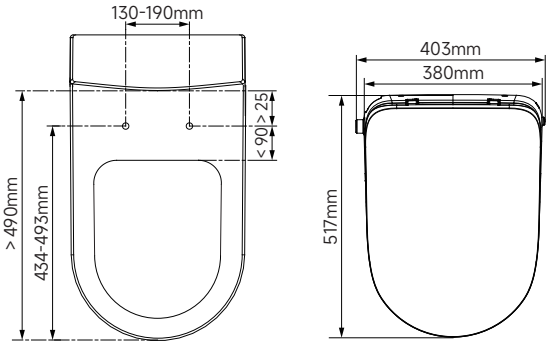

* Note: Please make sure this seat fits your current toilet.

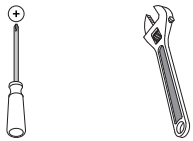

Phillips screwdriver Wrench

Tape measure Cup

Installation of Main Unit

WARNING: Installation can only be conducted by the authorized license plumber following NCC Part Three (PCA) with appropriate high-hazard cross connection control.

WARNING: According to PCA, AS/NZS 3500.1 and WMTS 051:2021, this douche seat must be externally installed an appropriate high-hazard backflow protection device, such as Reduced Pressure Zone Device (RPZD). It must be installed upstream of the toilet douche seat. Below figure as an example. (Backflow device is not included in this package, need be purchased from local market.)

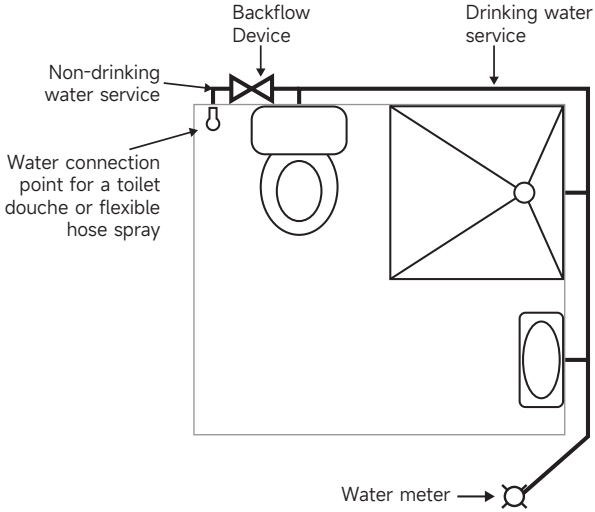

This product does not have a Deemed-to-Satisfy installation pathway and/or prescribed Hazard Rating in accordance with the Plumbing Code of Australia (PCA)

* This product has been tested for water flow before shipping. Please note that some residual water on the product is normal.
* Do not install this product in a wet place such as a bathroom, and do not place it in a place easily exposed to water.

1 Installation of base plate

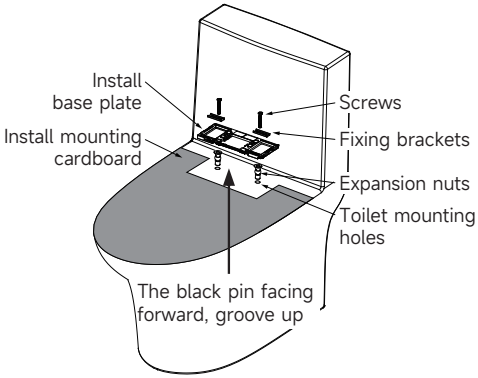

Install the expansion nuts into the toilet mounting holes first, and then securely install the base plate, fixing brackets and screws in sequence as shown.

2 Installation and disassembly of main unit

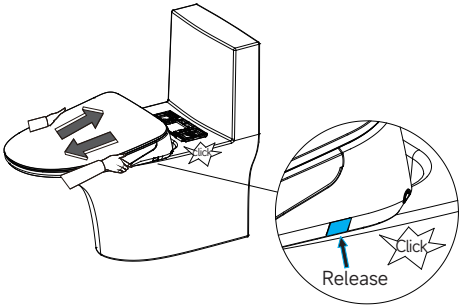

Installation of Main Unit: Push the main unit into the base plate until it locks with a "click" sound.
Disassembly of Main Unit: Press the "Release button", and pull out the main unit when a "click" sound is heard.
* Once the Release Button is pressed, you do not have to hold it during the disassembly process.

3 Installation of water inlet pipe and T valve

Please select the appropriate installation method according to your actual situation

Method 1

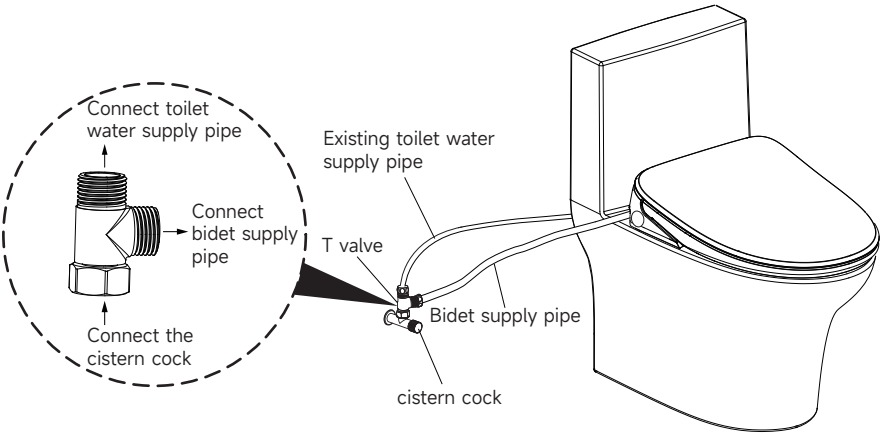

① Connect T valve to cistern cock (Remove the existing T valve.).
② Connect toilet water supply pipe to T valve as shown above.
③ Connect bidet water supply pipe to T valve as shown above.

3 Installation of water inlet pipe and T valve

Please select the appropriate installation method according to your actual situation

Method 2

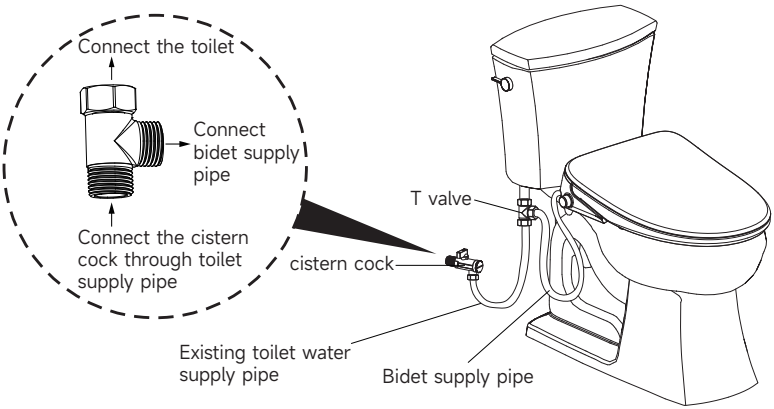

① Connect T valve to the toilet (Remove the existing T valve.);
② Connect toilet water supply pipe to T valve as shown above;
③ Connect bidet water supply pipe to T valve as shown above.

Preparation

1. Turn on the cistern cock

- Check the threaded connection for leaks to ensure complete sealing. Turn the cistern cock counterclockwise to the full open position.
  (Note: The cistern cock opens with a large torque for the first time.)

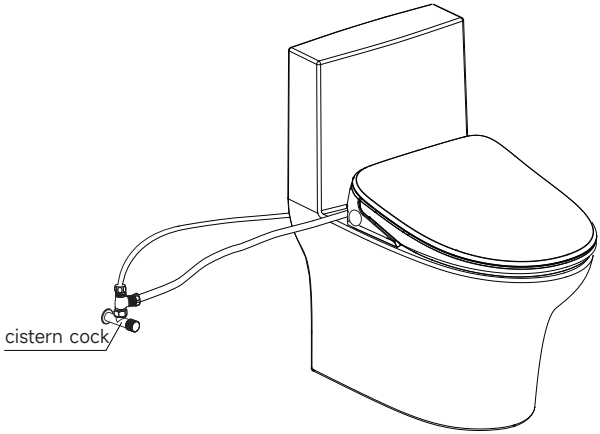

2. Power Connection

- Plug the power cord into a properly grounded electrical outlet.

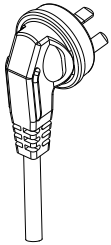

Important Notes
- This product is designed for use with a standard AU plug configuration.
- For enhanced electrical safety, the use of an external RCD (Residual Current Device), such as a safety switch, is recommended.
- The supplied power cord is designed for stable and reliable operation. Product design is continuously optimized to enhance performance and safety.
- Please refer to the actual product received for final configuration.

3. Self-inspection

1. Once power is connected, the buzzer beeps once. The white light on knob (button) flashes, and the self-inspection starts.
2. The buzzer beeps again, then the self-inspection completes, and the knob (button) lights up in white.
3. The product is ready to use.

Maintenance

Maintenance of Main Unit

1. Shut off power supply before doing maintenance.
2. Use only a soft, damp cloth to clean. Avoid using harsh chemicals.
3. Once cleaning is completed and all surfaces are dry, re-connect the power plug.

Neutral cleaner

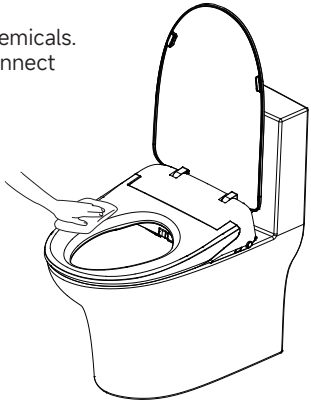

Note:
Do not rinse the surface of the product directly with water during maintenance.

Nozzle Maintenance

When there is dirt on the nozzle, maintain it according to the following methods:

1. When no one is seated, turn the knob clockwise (press Rear Washing Button). The nozzle will automatically stretch out to allow access for cleaning.
2. Nozzle can be removed and cleaned separately. (Hold the spray wand with one hand and pull the nozzle out with the other hand)
3. Put the nozzle back on and press the “Stop” button on the main unit or remote control to return the spray wand to its normal position.

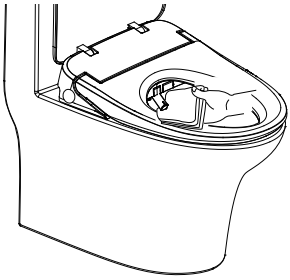

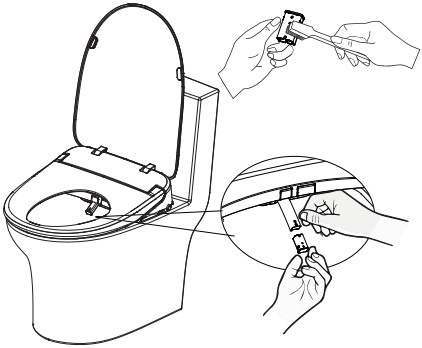

Note:
Do not pull or push the wand, to avoid damage.

Filter Cleaning for Pressure-maintaining Valve

1. Turn off the cistern cock.
2. Unplug and shut off the electricity.
3. Disassemble the cover and unscrew the filter connector with a screwdriver.
4. Take out the filter assembly with needle nose pliers.
5. Clean out the filter under running water using a toothbrush.
6. Reinstall the filter and tighten it with a screwdriver.

Note:
Be careful not to damage the sealing ring, otherwise water may leak.

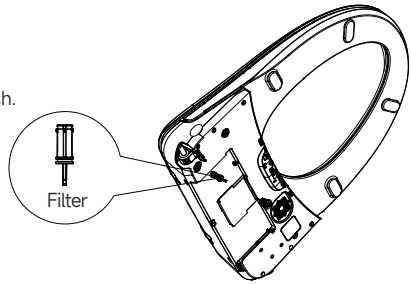

Self-cleaning Waterway Maintenance

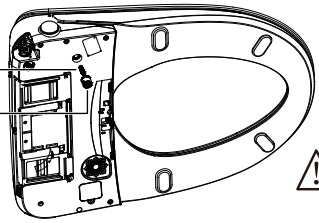

When the self-cleaning waterway is clogged, or if there is no water coming out during self-cleaning process:

Note:
Cut off power prior to discharging the water.

1. Turn off the cistern cock.
2. Unplug and shut off the electricity.
3. Remove the seat, press the flow reset valve in the middle with a flat-blade screwdriver, then reinstall the seat, and turn on the water supply.
4. If there is still no water coming out after pressing the flow reset valve, use a flat-blade screwdriver to unscrew the reset valve cover, remove the flow reset valve, and clean it with a toothbrush or small brush. After cleaning, put the components back, then reinstall the seat, and turn on the water supply.

Deodorizing Device Maintenance

Remove the screws from the underside of unit as shown below to access the deodorizing cartridge.
※ Replacement of the deodorizing cartridge is recommended every 3 years (the specific life span depends on the environment).
※ Please purchase deodorizing cartridge from the official online stores.

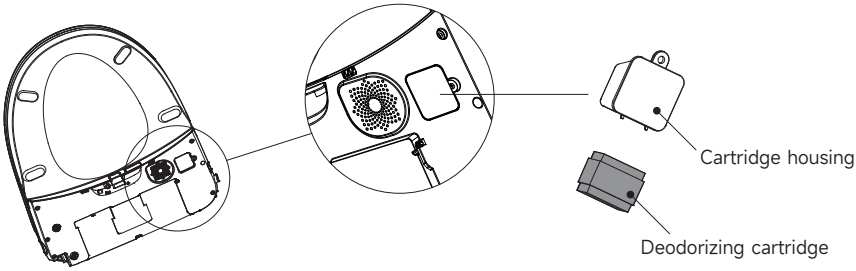

Disassembly and Installation of Clamp

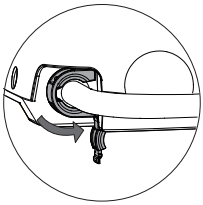

Disassembly: Open the clamp cover, rotate it counterclockwise, and use a flat-blade screwdriver to pry the clamp out of the slot.

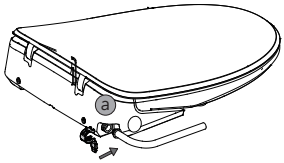

Installation: Push the inlet tubing into the quick-connect fitting on the unit. Secure with provided clamp.

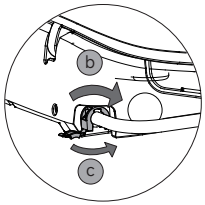

b. Rotate the clamp until the opening faces down.
c. Close the clamp cover

Troubleshooting Guide

Problem	Cause	Solution
No water from nozzle	Water supply hose is kinked	Straighten the hose to remove the kink
	Cistern cock is off	Turn on the cistern cock
	A water failure occurred	Restore the water supply
Poor water spraying	Water supply hose is kinked	Straighten the hose to remove the kink
	Cistern cock is not fully turned on	Turn on the cistern cock fully
	Filter is clogged	Clean the filter
Low water temperature	The water temperature is not set properly	Adjust the water temperature
Low seat temperature	The seat temperature is not set properly	Adjust the seat temperature
	In standby mode or energy saving mode	Switch to functional mode and wait for 3+ minutes
Low dryer temperature	The dryer temperature is not set properly	Adjust the dryer temperature
Dryer not blowing	In standby mode	Switch to functional mode to use dry function.
Spray wand cannot retract	Power off	Push back the spray wand gently and put power on
	Get stuck by impurities	Remove the impurities
Spray wand cannot stretch out	Power off	Turn on the power
	User is not within the sensing area of the seat	Adjust position on seat to activate the sensor
Remote control cannot display	The positive and negative direction of the batteries is incorrect	Reload the batteries
	Low battery	Replace new batteries
Malfunction of deodorization	User is not within the sensing area of the seat	Adjust position on seat to activate the sensor
	Deodorization function continues after user leaves	It is normal for the deodorizing function to continue operating after user leaves, for complete odor removal.
⚠ Caution	If the problem cannot be resolved as per above solutions, please disconnect the power and contact service providers.	

Note: it is normal that a new machine or a machine unused for a long time may produce a little smell when using the drying function.

Product warranty card

Model No.		Customer Name	
Seller		Purchasing Date	
Invoice No.		Customer Contact	
Distributer Stamp		Distributer Phone	

Thank you for choosing our product. This product is warranted for two (2) years since the purchasing date for free repair of problems arising out of defects in workmanship while using in accordance with installation manual and usage cations for intended purposes.

If the product does not work properly with warranty period, please contact us via info@aquatizspace.com .

This certificate must be presented to obtain free service under this warranty.

Our company reserves the rights to replace the product by other similar models.

We can serve to fix or repair the product at a reasonable service charge, after expiration of warranty period.

Service charges shall be paid even during the warranty period, if breakage or damage is caused by any of the following events (including but without limitation).

1. The user's negligence or mistake in operation, unreasonable repair or alteration.
2. Product are damaged by negligence or mistake during installation.
3. The movement of installation location of the product.
4. Using the product outside of intended use in residential housing or commerical hotels.
5. The use of non specified power supply (voltage, rating pressure)
6. The dirt, sand and impurities that causing invalid operation.
7. Damages due to force majeure (including but not limitation to natural disaster) or other incidents.
8. The user fails to use in compliance with the warning or caution described in the installation manual.

Remark:
Please fill in date, seller correctly. If there are some mistakes, the warranty will get invalid.
This two year warranty for free of charge of repair service is only for the items listed in the warranty.
The purchasing date is subject to the purchasing invoice or receipt.
Please keep this warranty and invoice/receipt available for repair or maintenance.

The picture of product may not be entirely consistent with actual appearance and color because of product improvements, please in kind prevail.

ASVFAC0498007A-1.3