北京平和
Bei Jing Ping He

PHSS Series

Compact Safety Light Curtain



PHSS Series introduction

PHSS Series safety light curtain comply with safety standard EN IEC61496-1/-2 (type 2), and with 25mm*25mm compact size; Curtain assist 10m long sensing distance; 0mm, 20mm, 40mm various distance are optional； With wire-syn and optical-syn as option by switching wire connection; Perfect self-diagnosis and protection function, power reverse protection, system undervoltage protection, output short current, output overload etc. protection functions; Various installation methods, applicable for different type of automation applications.

Product features

- 2nd class standard: comply with EN IEC61496-1/-2 (Type 2) safety standard;
- Dimension: 25*25mm;
- Various synchronized mode: wire-syn and optical-syn as optional;
- Sensing distance: up to 10m;
- Small blind zone: ensure full protection;
- Dual circuit outputs: improve safety level;
- Perfect self-diagnosis function: power overvoltage, undervoltage detection, output overflowing detection, output short each other detection;
- Strong electromagnetic interference resistance: can be use in various type of servo equipment without interference affect;
- Installation method: side and end cover as optional.

Product parameters

Safety class	Type 2 (IEC 61496-1/-2) , Cat.2/PL c (ISO 13849-1)
Power supply	DC 24V±20%
Consumption	<5W
Optic axis space	10mm, 20mm, 40mm
Resolution	15mm, 25mm, 45mm
Optic axis qty	10mm distance: 8, 12, 16, 20……200
	20mm distance: 4, 6, 8, 10……100
	40mm distance: 4, 6, 8,10……50
Protection height	Protection height S=N* Optic axis distance + Resolution （N Optical axis qty）
Light wave length	940nm
Response time	≤2* (N*0.1+1.2) ms
Safety output (OSSD)	PNP transistor output, max. load current 200mA, residual voltage lower than 1V (except voltage drop caused by cable lengthening), leakage current lower than 1mA
	NPN transistor output, max. load current 200mA, residual voltage lower than 1V (except voltage drop caused by cable lengthening), leakage current lower than 1mA
Circuit protection	Overvoltage, reversed polarity, output overflowing protection
Sensing distance	0.1~2m, 0.1~5m, 0.5~10m (Note: if false light please let us know)
Optical interference resistance	10000Lux (angle I >5°)
Light curtain type	Through beam
Synchronization	Optical-syn or Wire-syn
Enclosure material	Aluminum alloy
Enclosure protection class	IP65
Dimension	25*25mm
Vibration resistance	10~55Hz, amplitude 0.35±0.05mm, 20 times each X, Y, Z direction
Shock resistance	15g，6ms pulse, X, Y, Z 3 directions，100 times on each direction of a axial, total 600 times
Working temperature	-10~55℃ (no freezing)
Storage temperature	-30~70℃ (no freezing)
Working humidity	When 20℃，relative humidity <85%

Model Selection (ex: PHSS1620NL-2)

Product Series	Optic axis qty	Optic axis distance	Output type	Montage bracket		Sensing distance
PHSS	16	20	N	L	–	2
	4, 6, 8……	10mm 20mm 40mm	N: NPN*2 P: PNP*2	L: side montage bracket LD: LD end montage bracket		2: 0.1~2m 5: 0.1~5m 10: 0.5~10m Note: if false light please let us know

Product Dimension

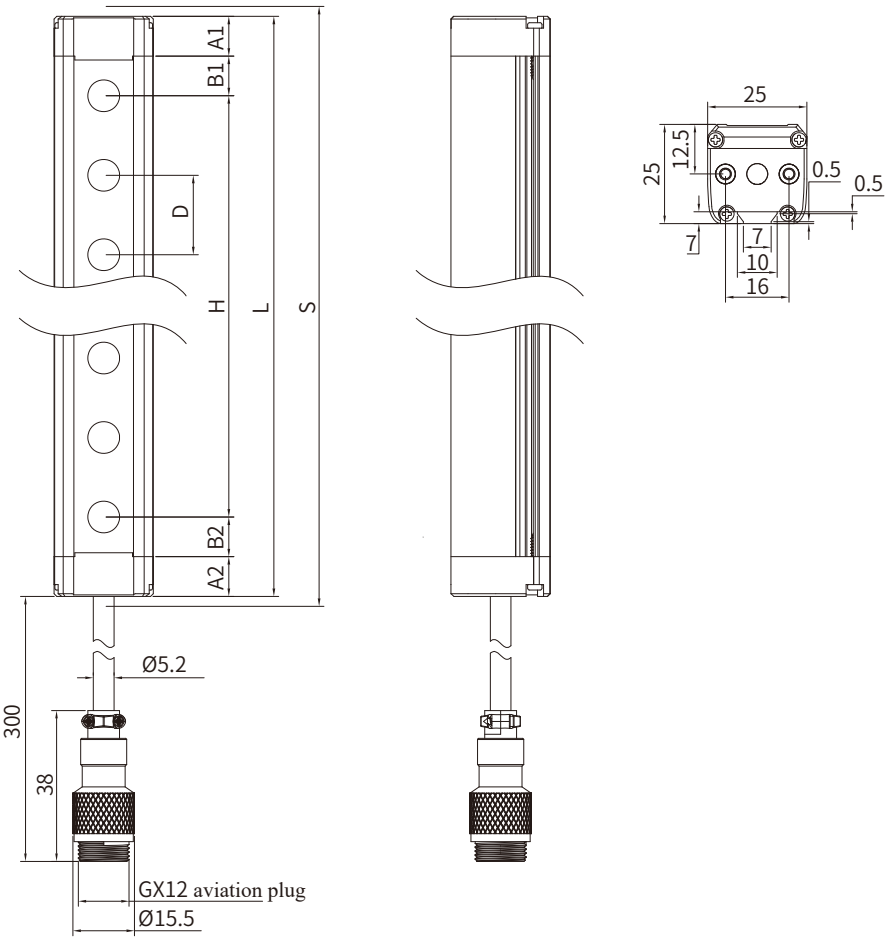

A1: Up cover	A1=10mm, A2=10mm
A2: Bottom cover	When D=10mm, B1=5mm, B2=5mm
B1: Up blind area	When D=20mm, B1=10mm, B2=10mm
B2: Bottom blind area	When D=40mm, B1=10mm, B2=30mm
D: Optical axis distance	
H: Detection height	H Detection height: H= (optical axis qty-1)*optical axis distance
S: Protection height	S Protection hight: S= (optical axis qty)*optical axis distance+resolution
L: Total height	L Total height: L=A1+A2+B1+B2+H

PHSS Series Selection Table

- **Optical axis distance 10mm, resolution 15mm**

Optical axis qty	Response time (ms)	Protection height (mm)	Detection height (mm)	Total height (mm)	Model
8	≤4	95	70	100	PHSS0810
12	≤4.8	135	110	140	PHSS1210
16	≤5.6	175	150	180	PHSS1610
20	≤6.4	215	190	220	PHSS2010
24	≤7.2	255	230	260	PHSS2410
28	≤8	295	270	300	PHSS2810
32	≤8.8	335	310	340	PHSS3210
36	≤9.6	375	350	380	PHSS3610
40	≤10.4	415	390	420	PHSS4010
44	≤11.2	455	430	460	PHSS4410
48	≤12	495	470	500	PHSS4810
52	≤12.8	535	510	540	PHSS5210
56	≤13.6	575	550	580	PHSS5610
60	≤14.4	615	590	620	PHSS6010
64	≤15.2	655	630	660	PHSS6410
68	≤16	695	670	700	PHSS6810
72	≤16.8	735	710	740	PHSS7210
76	≤17.6	775	750	780	PHSS7610
80	≤18.4	815	790	820	PHSS8010
84	≤19.2	855	830	860	PHSS8410
88	≤20	895	870	900	PHSS8810
92	≤20.8	935	910	940	PHSS9210
96	≤21.6	975	950	980	PHSS9610
100	≤22.4	1015	990	1020	PHSS10010
104	≤23.2	1055	1030	1060	PHSS10410
108	≤24	1095	1070	1100	PHSS10810
112	≤24.8	1135	1110	1140	PHSS11210
116	≤25.6	1175	1150	1180	PHSS11610
120	≤26.4	1215	1190	1220	PHSS12010
124	≤27.2	1255	1230	1260	PHSS12410
128	≤28	1295	1270	1300	PHSS12810
132	≤28.8	1335	1310	1340	PHSS13210
……	……	……	……	……	……
200	≤42.4	2015	1990	2020	PHSS20010

Note: besides above models, other curtains can be customized.

PHSS Series Selection Table

- **Optical axis distance 20mm, resolution 25mm**

Optical axis qty	Response time (ms)	Protection height (mm)	Detection height (mm)	Total height (mm)	Model
4	≤3.2	105	60	100	PHSS0420
6	≤3.6	145	100	140	PHSS0620
8	≤4	185	140	180	PHSS0820
10	≤4.4	225	180	220	PHSS1020
12	≤4.8	265	220	260	PHSS1220
14	≤5.2	305	260	300	PHSS1420
16	≤5.6	345	300	340	PHSS1620
18	≤6	385	340	380	PHSS1820
20	≤6.4	425	380	420	PHSS2020
22	≤6.8	465	420	460	PHSS2220
24	≤7.2	505	460	500	PHSS2420
26	≤7.6	545	500	540	PHSS2620
28	≤8	585	540	580	PHSS2820
30	≤8.4	625	580	620	PHSS3020
32	≤8.8	665	620	660	PHSS3220
34	≤9.2	705	660	700	PHSS3420
36	≤9.6	745	700	740	PHSS3620
38	≤10	785	740	780	PHSS3820
40	≤10.4	825	780	820	PHSS4020
42	≤10.8	865	820	860	PHSS4220
44	≤11.2	905	860	900	PHSS4420
46	≤11.6	945	900	940	PHSS4620
48	≤12	985	940	980	PHSS4820
50	≤12.4	1025	980	1020	PHSS5020
52	≤12.8	1065	1020	1060	PHSS5220
54	≤13.2	1105	1060	1100	PHSS5420
56	≤13.6	1145	1100	1140	PHSS5620
58	≤14	1185	1140	1180	PHSS5820
60	≤14.4	1225	1180	1220	PHSS6020
62	≤14.8	1265	1220	1260	PHSS6220
64	≤15.2	1305	1260	1300	PHSS6420
66	≤15.6	1345	1300	1340	PHSS6620
……	……	……	……	……	……
100	≤22.4	2025	1980	2020	PHSS10020

Note: besides above models, other curtains can be customized.

PHSS Series Selection Table

- **Optical axis distance 40mm, resolution 45mm**

Optical axis qty	Response time (ms)	Protection height (mm)	Detection height (mm)	Total height (mm)	Model
4	≤3.2	205	120	180	PHSS0440
6	≤3.6	285	200	260	PHSS0640
8	≤4	365	280	340	PHSS0840
10	≤4.4	445	360	420	PHSS1040
12	≤4.8	525	440	500	PHSS1240
14	≤5.2	605	520	580	PHSS1440
16	≤5.6	685	600	660	PHSS1640
18	≤6	765	680	740	PHSS1840
20	≤6.4	845	760	820	PHSS2040
22	≤6.8	925	840	900	PHSS2240
24	≤7.2	1005	920	980	PHSS2440
26	≤7.6	1085	1000	1060	PHSS2640
28	≤8	1165	1080	1140	PHSS2840
30	≤8.4	1245	1160	1220	PHSS3040
32	≤8.8	1325	1240	1300	PHSS3240
34	≤9.2	1405	1320	1380	PHSS3440
36	≤9.6	1485	1400	1460	PHSS3640
38	≤10	1565	1480	1540	PHSS3840
40	≤10.4	1645	1560	1620	PHSS4040
42	≤10.8	1725	1640	1700	PHSS4240
44	≤11.2	1805	1720	1780	PHSS4440
46	≤11.6	1885	1800	1860	PHSS4640
48	≤12	1965	1880	1940	PHSS4840
50	≤12.4	2045	1960	2020	PHSS5040

Note: besides above models, other curtains can be customized.

Connection wiring

Optical-syn (NPN)

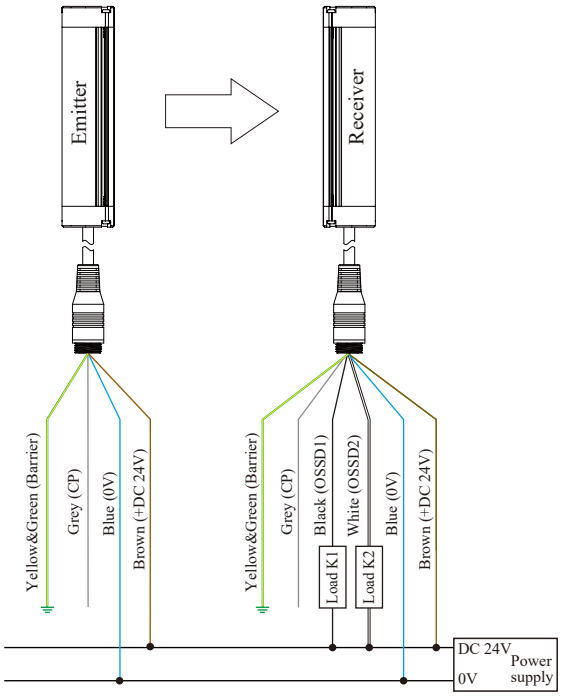

Optical-syn (PNP)

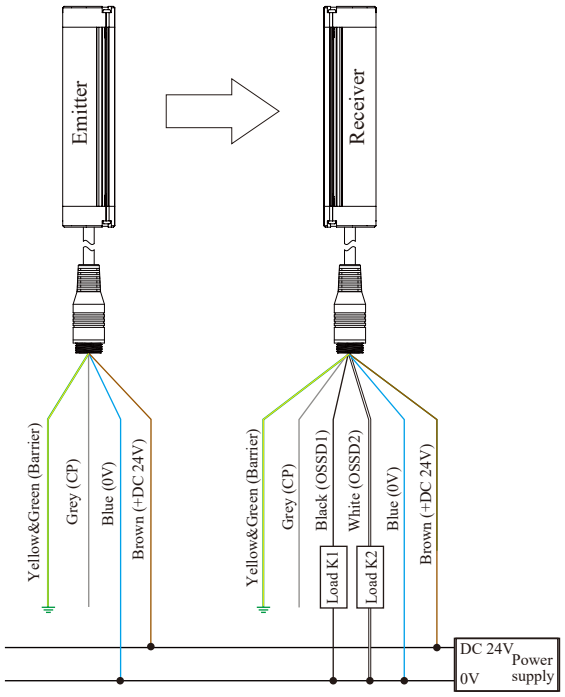

Optical-syn (NPN)

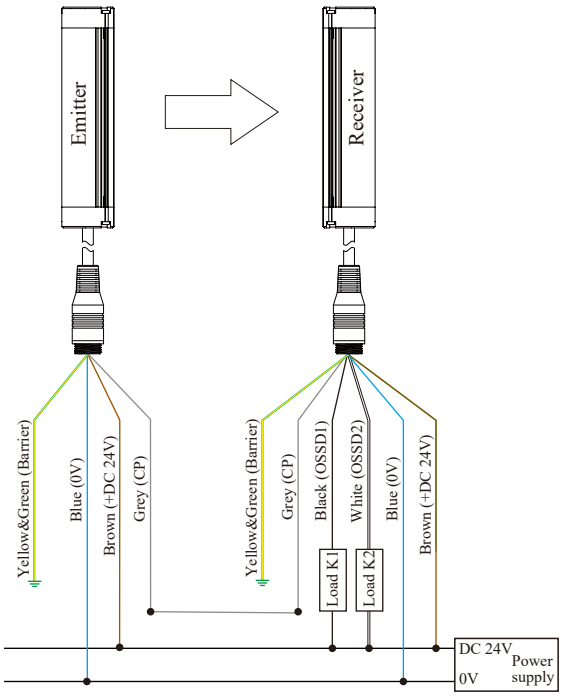

Optical-syn (PNP)

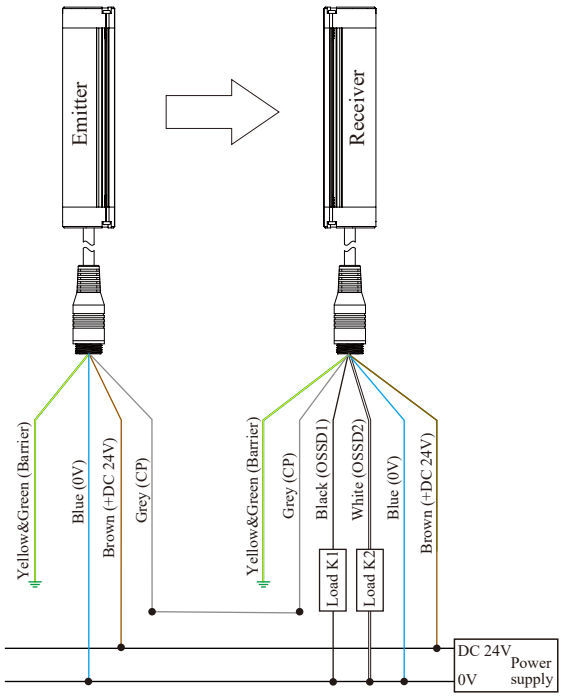

NPN output timing chart

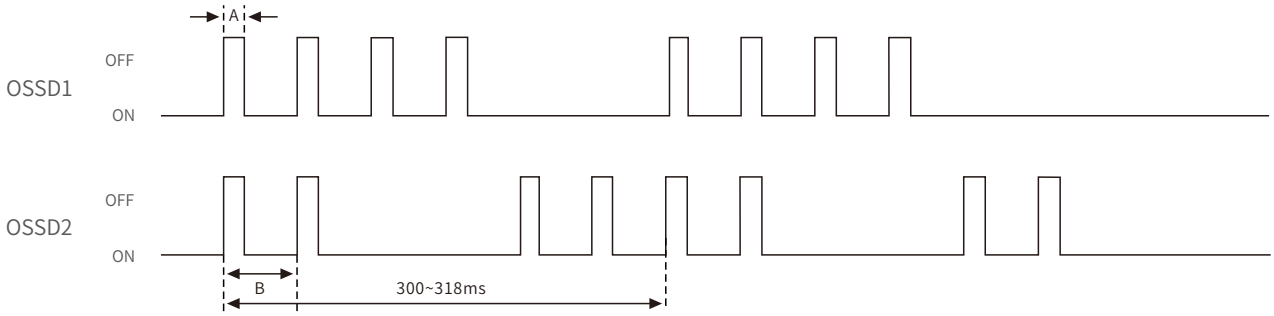

A: 200~250us B: 50~68ms

PNP output timing chart

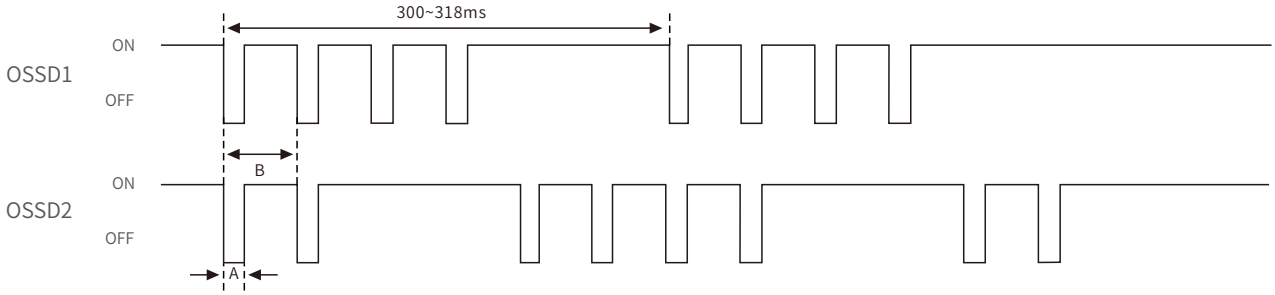

A: 200~250us B: 50~68ms

Wire Specification

Barrier	Color	Wire mark	Function	Connection
Emitter	Brown	DC 24V	Power supply+	Connect to power supply+ 24V
	Blue	0V	Power supply-	Connect to power supply- 0V
	Grey	CP	CP wire	Connect to CP wire of receiver
	Yellow&Green	PE	Shielding	Grounding
Receiver	Brown	DC 24V	Power supply+	Connect to power supply+ 24V
	Blue	0V	Power supply-	Connect to power supply- 0V
	Grey	CP	CP wire	Connect to CP wire of emitter
	Yellow&Green	PE	Shielding	Grounding
	Black	OSSD1	Output signal 1	Safe output 1
	White	OSSD2	Output signal 2	Safe output 2

Light Indicator

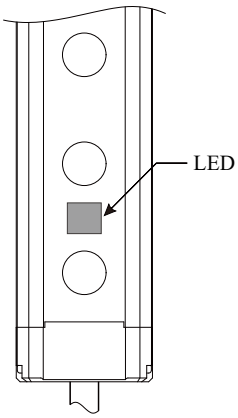

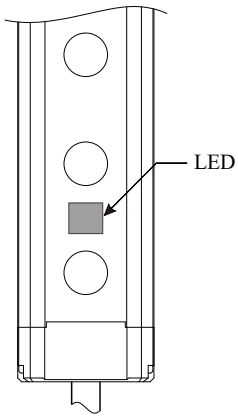

Working Status		Emitter			Receiver		
		Priority	Red	Green	Priority	Red	Green
Normal	OSDD ON	/	OFF	Steady ON	/	OFF	Steady ON
	OSDD OFF	/	OFF	Steady ON	/	Steady ON	OFF
Abnormal	Overvoltage	0	2Hz flickering	OFF	0	2Hz flickering	OFF
	Undervoltage	1	1Hz flickering	OFF	1	1Hz flickering	OFF
	Output overload	/	/	/	2	Red and green light 2 Hz flickering alternatively	
	Two way output short circuit	/	/	/	3	Red and green light 1 Hz flickering alternatively	
	End board detection	2	Steady ON	2Hz flickering	4	Steady ON	2Hz flickering
	EEPROM	3	Steady ON	1Hz flickering	5	Steady ON	1Hz flickering
	CP error	/	/	/	6	OFF	2Hz flickering
	CP disconnect when wire-syn	4	OFF	1Hz flickering	7	OFF	1Hz flickering

Montage bracket (optional)

Apperance	Montage type	Accessories	Dimension
	L type side montage bracket	L type bracket（4PCS） M5 slider（4PCS） M6 flat pad（4PCS） M6 spring pad（4PCS） M6*16 screw（4PCS） M5*6 screw（4PCS）	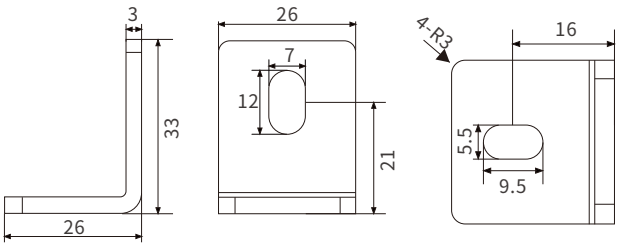
	LD type end montage bracket	End bracket（4PCS） M6*16 screw（4PCS） M6 flat pad（4PCS） M6 spring flat（4PCS） M3*6 screw（8PCS）	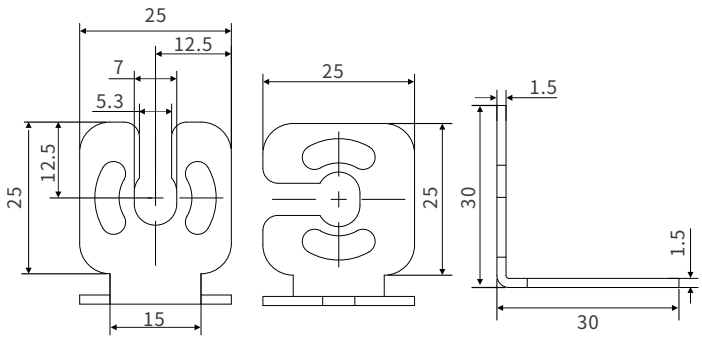

Application

