Guangdong Fullde Electronics Co., Ltd.
Add.: Baisha 3rd village Industrial Zone, HumenTown,
Dongguan ,Guangdong Province, China
Tel: 86-0769-81686081
E-mail:sales10@fullde.cn
Web: www.fullde.com

Zhuzhou Fullde Rail Transit Research Institute Co., Ltd.
Add.: Phase 2 of Orbital Intelligence Valley, No. 79, Liancheng
Road, Shifeng District,Zhuzhou City, Hunan Province, China
E-mail:sales10@fullde.cn
Web: www.fullde.com

Hunan Fullde Electric Co., Ltd.
Add.: NiuTan He Industrial Zone, Jingkai District,Taojing
County, Yiyang City,Hunan Province, China
E-mail:sales10@fullde.cn
Web: www.fullde.com

Customized power supply service provider



CATALOG

Company Introduction

01 Company Profile
02 Company Honor
03-04 Company Culture/Company Memorabilia
05-06 Product Overview

High Energy Physics, Nuclear Physics, Medical Series

07 High-precision low-voltage integrated power supply
08 High voltage power supply plug-in and chassis
09 High voltage DC power supply
10 High voltage AC power supply
11 High voltage pulse power supply
12 Accelerator high voltage power supply
13 High voltage module

Military power supply

14 AC/DC Module
15 Grounding Monitor
16 Motor simulated load
17 Helicopter medium frequency power supply
18 Helicopter DC Power Supply
19 High-level power supply
20 Armored Drone Power Supply

Customized power supply

21 Servo power supply
22 Servo power supply protection device
23 Low ripple module power supply

Ships, shore power

24 Shore power supply
25 Solid state DC circuit breaker
26 High and low voltage cabinet
27 GGJ Low voltage reactive power compensation device
28 XGN□-12(F)、XGN□-12(FR) Box-type fixed indoor AC metal-enclosed switchgear
29 DFW series cable branch box (European and American style)
30 MNS1、GCS、GCK、GGD Low voltage switchgear
31 High voltage/low voltage prefabricated substations
32 AC/DC Electronic Load

New energy, energy storage

33 Battery charging and discharging equipment
34 Portable energy storage power supply
35 On-board energy storage UPS power supply

Test bench

36 Medium voltage high power rectifier
37 Medium voltage
38 Medium voltage high current short circuit test bench



▲ Zhuzhou Fullde Rail Transit Research Institute Co., Ltd.



▲ Hunan Fullde Electric Co., Ltd.



▲ Guangdong Fullde Electronics Co., Ltd.

Company Profile

Zhuzhou Fullde Rail Transit Research Institute Co., Ltd. is a national high-tech power electronics integrated system R&D and manufacturing enterprise, mainly develops, produces and sells high-tech products such as special power supply equipment, medium and high voltage intelligent detection systems, rail transit locomotive braking systems, and new energy power battery detection systems. The products are mainly used in strategic emerging industries such as military ships, new energy vehicles, and rail transit. It has become a strategic cooperation supplier for State Grid, China Southern Power Grid, CSSC, PLAN, CRRC, GE of the United States, Siemens of Germany, and Hitachi of Japan.

The company has successively won honors such as “National High-tech Enterprise”, “National Intellectual Property Advantage Enterprise”, “Hunan Province's First Batch of Advanced Manufacturing and Modern Service Industry Integration Development Pilot Enterprises”, “Hunan Province Small Giant Enterprise”, “Hunan Province Service Industry Development Special Project”, and “Hunan Province Information and Industrialization Integration Management System Standardization Pilot Enterprise”, and has undertaken provincial and national innovation projects many times.

The company takes technological innovation as its driving force, and has applied for 154 patents. We has two academician workstations and takes “specialized, refined, differentiated, and innovative” special power supplies and medium and high voltage intelligent detection systems as development direction, responds to the national military-civilian integration development strategy, vigorously promotes scientific and technological innovation and talent training, and makes a contribution to my country's military-civilian integration cause!

At present, we have provided 2500 channels of detector high-voltage power supply at LHAASO and is expected to provide 500 channels per year in future, 200 channels at CERN and have been operating stably for 2 years and expected to provide 9000 channels of high voltage in the next year, 2000 channels of low-voltage power supply at the CSNS and operate stably for 3 years. At the same time, we are actively participating in the customization of high and low voltage power supply for multiple large scientific facilities in the field of high energy physics .

Company Honor

Guangdong Fullde Electronics Co., Ltd.

▲ National-level SRID “little giant” enterprise
▲ National High-Tech Enterprise
▲ National Intellectual Property Patent Advantage Enterprise
▲ National Electric Energy Conversion and Control Engineering Technology Research Center
▲ State Grid DC Construction Department Equipment Construction Group
▲ Guangdong Engineering Technology Research Center
▲ Guangdong Province Trustworthy Enterprise
▲ Dongguan City Multiplication Plan Pilot Enterprise
▲ Dongguan Listed Backup Enterprises
▲ Dongguan Engineering Technology Research Center
▲ Dongguan City Patent Advantage Enterprise
▲ Dongguan Academician Workstation

Hunan Fullde Electric Co., Ltd.

▲ National High-Tech Enterprise
▲ Hunan Province Little Giant Enterprise
▲ Hunan Province Accredited Academician and Expert Workstation
▲ National-level SRID “little giant” enterprise

Zhuzhou Fullde Rail Transit Research Institute Co., Ltd.

▲ National High-Tech Enterprise
▲ Hunan Province Little Giant Enterprise

Patent situation



· 313 Utility patents



· 115 Invention patents



· 10 Appearance patents



· 23 Software copyrights

Company Culture

Corporate Vision

●Become a global leader in the power sector

Enterprise spirit

●Stick to your dreams and stay one step ahead

Business philosophy

●Blessing the people and spreading virtue to the world

Service Concept

●Provide customers with real and valuable services

Employment philosophy

●Talent is the source of Fude's continuous creation of economy, humanity and value

Company Memorabilia

2006
· 东莞总部成立
广东福德电子有限公司
· Dongguan headquarters established Guangdong Fullde Electronics Co., Ltd.

2011
· 涉足电力领域
· 被认定为省民营科技企业
· Involved in the power sector
· Identified as a provincial private technology enterprise

2012
· 成立新能源技术研发中心
· 被认定为高新技术企业
· Established a new energy technology R&D center
· Identified as a high-tech enterprise

2013
· 风力发电用栅格结构Crowbar电阻
· 被科技部创新创业基金立项
· Grid structure Crowbar resistor for wind power generation
· Approved by the Ministry of Science and Technology Innovation and Entrepreneurship Fund

2014
· 成立轨道交通制动电阻装置研发中心
· 设立全资子公司湖南福德电气有限公司
· Established a rail transit brake resistor device R&D center
· Established a wholly-owned subsidiary, Hunan Fullde Electric Co., Ltd.

2015
· 高新技术企业复审认定通过
· High-tech enterprise review and certification passed

2016
· 被认定为东莞市上市后备企业
· 广东省创新创业大赛三等奖
· 湖南子公司被认定为高新技术企业及湖南省省级企业技术中心
· Identified as a potential listed company in Dongguan City
· Third prize in Guangdong Province Innovation and Entrepreneurship Competition
· Hunan subsidiary was recognized as a high-tech enterprise and Hunan Provincial Enterprise Technology Center

2017
· 被认定为东莞市倍增计划试点企业
· 东莞市知识产权保护重点企业
· 省守合同重信用企业
· Identified as a pilot enterprise of Dongguan City's doubling plan
· Dongguan City's key enterprise for intellectual property protection
· Provincial contract-abiding and credit-worthy enterprise

2018
· 被认定为东莞市工程技术中心
· 东莞市专利优势企业
· 广东省工程技术中心
· Recognized as Dongguan Engineering Technology Center
· Dongguan Patent Advantage Enterprise
· Guangdong Engineering Technology Center

2019
· 成立东莞院士工作站
· 湖南省院士工作站
· 湖南省科技进步一等奖
· 国家级小巨人企业
· 国家知识产权优势企业
· 省创新创业大赛三等奖
· Establishment of Dongguan Academician Workstation
· Hunan Provincial Academician Workstation
· Hunan Provincial Science and Technology Progress First Prize
· National Little Giant Enterprise
· National Intellectual Property Advantage Enterprise
· Provincial Innovation and Entrepreneurship Competition Third Prize

2020
· 在疫情期间实现了逆势增长，营业收入同比增长60%
· 被认定为广东省博士工作站
· Achieved counter-cyclical growth during the epidemic, with operating income increasing by 60% year-on-year
· Identified as a doctoral workstation in Guangdong Province

2021
· 子公司福德电气被认定为第一批重点支持的国家级专精特新“小巨人”企业
· 通过IRIS (国际铁路兴业标准) 体系认证
· 子公司株洲福德被认定为湖南省小巨人企业
· 湖南省服务业发展专项项目
· 湖南省两化融合管理体系贯标试点企业
· Subsidiary Fude Electric was recognized as the first batch of national-level specialized and innovative "little giant" enterprises with key support
· Passed IRIS (International Railway Industry Standard) system certification
· Subsidiary Zhuzhou Fude was recognized as a small giant enterprise
· Hunan Province Service Industry Development Special Project
· Hunan Province Two-in-one Integration Management System Standardization Pilot Enterprise

2022
· 国家专精特新“小巨人”企业
· 子公司被认定国家知识产权优势企业
· National Specialized and New "Little Giant" Enterprise
· Subsidiary recognized as a national intellectual property advantage enterprise

2023
· 坚守可持续发展的不变梦想
· Stick to the unchanging dream of sustainable development

Product Overview

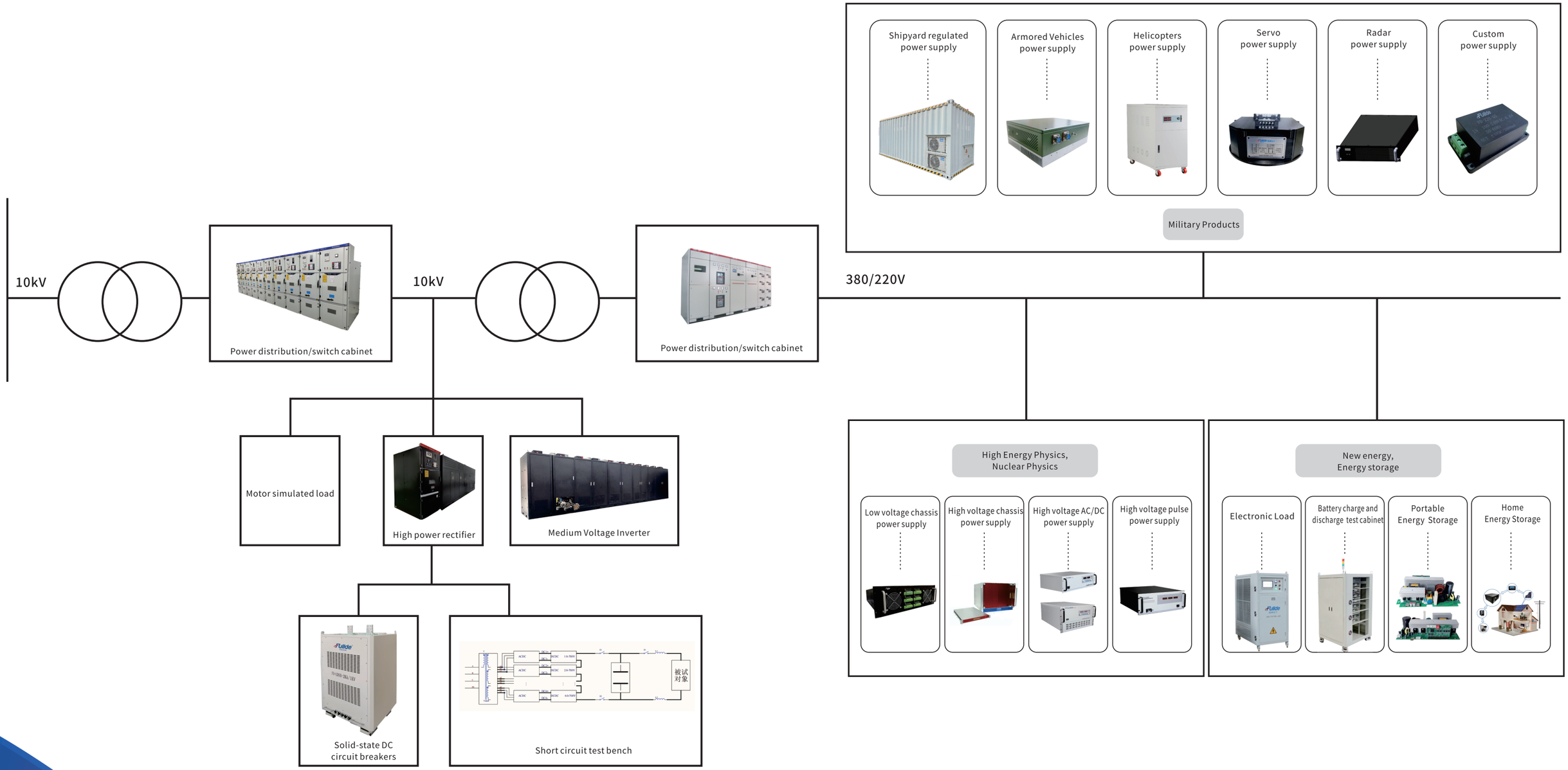

High-precision low-voltage integrated power supply

Product Introduction

The product is mainly used in multi-channel, centralized layout scenarios to provide stable, reliable, low-ripple DC power for high-energy physics detector readout electronics and medical equipment readout modules. To ensure the long-term stability and reliability of each output node, the power supply needs to monitor all output states and have hot backup and data interaction functions that comply with specific field communication protocols.





Features

- Standard 19-inch rackmount chassis
- Low ripple (<5mVpp), high efficiency (single channel efficiency>90%)
- Hot backup function: when a channel fails, it can switch to the backup channel output without delay
- Can work in high radiation and strong electromagnetic interference environment
- With overvoltage, overcurrent, overtemperature and short circuit protection functions
- Modular design, supports single-channel remote control
- Intelligent monitoring, supporting RS485, ETH, fiber optic communication, Modbus, OPC-UA and dedicated Kafka data protocol
- Chip-level localization

Parameter Table

Model	350D70108C	350D70316C	051P120110C	051P120320C	051P120440C	061P360324C
Output voltage	±7Vdc	±7Vdc	12Vdc	12Vdc	12Vdc	36Vdc
Output ripple	≤5mVp-p	≤5mVp-p	≤5mVp-p	≤5mVp-p	≤5mVp-p	≤100mVp-p
Output Channel	8	16	10	20	40	24
Overall efficiency	81%	85%	83%	85%	87%	85%
Chassis size	19''1U	19''3U	19''1U	19''3U	19''4U	19''3U
Hot Backup	none	none	none	none	none	1:1
Communication Protocol	Support RS485, ETH, fiber optic communication, Modbus, OPC-UA and dedicated Kafka data protocol					

Typical case: PRSLVI350D70108C

project	Technical indicators	Index value
Working conditions	Working conditions	The operating environment temperature of this equipment for long-term stable operation is -25℃~+70 andtherelative humidityis10%~90%
Technical indicators	Rated input voltage	Input voltage/frequency: 220VAC±20%/50Hz
	Rated output voltage	Output voltage: ±7.5V, can be adjusted to ±7V according to needs
	Number of output channels	A single chassis contains 8 channels of positive and negative voltage output; a single channel of positive and negative voltage uses 2 modules in series
	Rated output power (single channel)	Rated output power can reach 45W
	Overload operation	The whole machine can run for a long time at 1.2 times the rated power
	Output voltage accuracy	≤0.5%
	Output voltage ripple Vp-p (no load)	≤5mV
	Single channel efficiency (full load)	≥90%
	Overall efficiency (full load)	≥80%

High voltage power supply plug-in and chassis

Product Introduction

The high-voltage integrated power supply can meet the wide application requirements in the fields of high-energy physics, nuclear physics, and medical instruments. The system includes a high-voltage output module (plug-in), a display module (plug-in), a general IO module (plug-in), and a detection module (plug-in). Modularity, reliability, and flexibility are the main design points of this series of products.

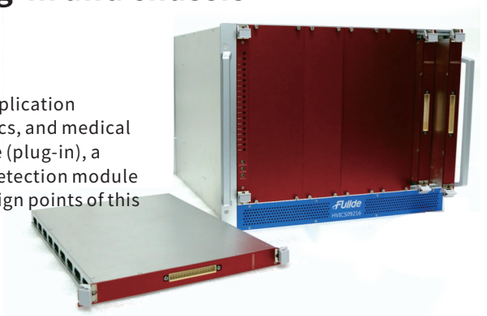

Features

- Suspended output, maximum output voltage 5000V , maximum output current 10mA
- Highly integrated 19 '' chassis, including up to 17 slots, for installing high voltage power modules and IO controllers
- Each channel works independently, and the output voltage, switch status, and upper and lower slopes can be set independently locally/remotely
- Each channel has independent real-time voltage, current and temperature monitoring
- Each channel has independent over-temperature, over-voltage, over-current, and short-circuit protection, and the protection threshold can be set independently locally/remotely
- Automatic temperature compensation, each channel high voltage output has ultra-low temperature drift characteristics

Parameter Table

	model	HVIMD09214	HVIMD01314	HVIMD15208	HVIMD18208	HVIMD02308
High voltage plug-in	Output voltage	0~900Vdc	0~1000Vdc	0~1500Vdc	0~1800Vdc	0~2000Vdc
	Output Current	3mAmax	6mAmax	5mAmax	10mAmax	10mAmax
	Number of channels	14	14	8	8	8
	Voltage monitoring accuracy	<0.1V	<0.1V	<0.2V	<0.2V	<0.2V
	Current monitoring accuracy	<100nA				
	Voltage accuracy	<0.5V				
	Voltage ripple	<100mVpp				
	Temperature Drift	<20ppm/℃				
	Power-on speed	1-50V/s (programmable)				
	Power-off speed	1-50V/s (programmable)				
	Protection Delay	>100V/ms				
	Communication	CAN, RS485				

	model	HVICS09216	HVICS13216	HVICS15216	HVICS18216	HVICS02308
High voltage chassis	Output voltage	0~900Vdc	0~1000Vdc	0~1500Vdc	0~1800Vdc	0~2000Vdc
	Output Current	3mAmax	6mAmax	5mAmax	10mAmax	10mAmax
	Number of plugins	16				
	Number of channels	224	224	128	128	128
	Voltage monitoring accuracy	<0.1V	<0.1V	<0.2V	<0.2V	<0.2V
	Current monitoring accuracy	<100nA				
	Voltage accuracy	<0.5V				
	Voltage ripple	<100mVpp				
	Temperature Drift	<20ppm/℃				
	Power-on speed	1 -50V/s (programmable)				
	Power-off speed	1 -50V/s (programmable)				
	Communication	Support RS485, ETH, fiber optic communication, Modbus, OPC-UA and dedicated Kafka				
	size	19 " 8U				

High voltage DC power supply



Product Introduction

High-performance 19" standard rack-mounted high-voltage chassis power supply. It adopts digital control mode to meet the functional requirements of customers' various control settings. The nanosecond arc protection response capability ensures trouble-free operation of the power supply. The built-in PFC circuit makes the power factor reach above 0.99. It adopts air natural convection cooling to dissipate heat. This series of products has complete functions, wide input and output range, and can also add functions that customers need to customize through software.

Features

- ●Standard 19-inch rackmount chassis/modular
- ●Nanosecond overvoltage, overcurrent, short circuit and arc protection
- ●Low ripple 0.1%Vp-p
- ●Safety interlock function
- ●Intelligent monitoring, digital programmable

Parameter Table

model	PRS-2200TD	PRS-2202TD	PRS-2204TD	PRS-2041TD	PRS-2081TD	PRS-4080TC
Output voltage	1kV-60kV	1kV-150kV	1kV-50kV	1kV-225kV	1kV-30kV	1kV-50kV
Output Pow er	600W	2kw	4kw	5-10kw	15kw	300W
Voltage Regulation	0.01% (no load to rated load) ; ±0.01% (input voltage changes by ±10%).					
Current Regulation	Relative load: 0.01% (no load to rated load). Relative input: ±0.01% (input voltage change is ±10%).					
Ripple voltage	0.5%Vpp	1%Vpp	1%Vpp	1.6%Vpp	1%Vpp	1%Vpp
Temperature coefficient	0.01%/℃					
Stability	<0.1%/8h	<0.1%/8h	<0.1%/8h	<0.05%/8h	<0.1%/8h	<0.1%/8h
size	19 " Chassis					
Remark					Parallel 1MW	Positive and negative sw itchable

High voltage AC power supply



Product Introduction

High voltage AC power supply, the output AC voltage can reach ±20kV. The output voltage and frequency are continuously adjustable, with digital display function, overvoltage and overcurrent protection function, mainly used for Hi-POT test, plasma, AC electrostatic field, leakage detection, withstand voltage test, etc.

Features

- ●Standard 19-inch rackmount chassis/modular
- ●Nanosecond overvoltage, overcurrent, short circuit and arc protection
- ●5kHz-30kHz center frequency optional, center frequency ±10% adjustable
- ●Safety interlock function
- ●Customizable

Parameter Table

model	PRS-4010TAC	PRS-4142TAC
Maximum output voltage	5-40kV	
Output Pow er	1kW	150kW
Center frequency	5k-30kHz	
Voltage Regulation	0.5 % (no load to rated load) ; ± 0.5 % (input voltage change is ±10%).	
Current Regulation	0.5% (no load to rated load). ±0.5% (input voltage changes by ±10%).	
Temperature coefficient	0.01%/℃	
Stability	<0.5%/8h	
size	3U	186x220x375mm

High voltage pulse power supply



Product Introduction

The compact high-performance high-voltage pulse power supply can output nearly standard square waves and fixed voltage pulses, with a maximum output voltage of 40kV. Through external optical trigger signal control, the trigger delay is less than 300ns, and the jitter is less than 100ns. Users can customize the trigger mode, output continuous pulses or adjustable pulse width. It has overvoltage and overcurrent protection, and nanosecond arc transient response function.

Features

- ●Ultra-small size
- ●Output pulse voltage is optional from 1kv to 40kV, output pulse width is optional from 300ns to 50us
- ●Trigger delay is less than 300ns, jitter is less than 100ns
- ●Intelligent monitoring, digital programmable

Parameter Table

model	PRS-3011TP	PRS-3012TP	PRS-3080TP	PRS-3090TP
Input voltage	24Vdc	24Vdc	220Vac	220Vac
Maximum output voltage	6kV	6kV	40kV	20kV
Pulse pow er	>60kW	300kW	1kW	100kW
Pulse Width	3-50us	1-5us	8-50us	300ns
Pulse frequency	-	<5kHz	1-1kHz	1-10kHz
Pulse rise time	<200ns	250ns	15us	<1us
Pulse fall time	<200ns	250ns	15us	<1us
Dimensions (mm)	75x35x364	98x43x263	4U	4U

Fullde Electric

Accelerator high voltage power supply



Product Introduction

This product uses 12-pulse thyristor controlled rectification technology, medium voltage three-level inverter technology and high voltage rectification technology to achieve high voltage AC-DC conversion. It can be widely used in mining, metallurgy, ship power systems, power grids, light sources, tokamaks, colliders, nuclear energy accelerators and other large scientific devices. As the main energy source in the acceleration process of particle beams, it provides high voltage DC power for particle accelerators.

Features

- ●With over-current, phase loss, overload, short circuit, over-temperature and other protections
- ●High voltage level, single unit rated output voltage 200kV, can be operated in series
- ●Fast transient response, capable of rapid shutdown and restart to cope with frequent load ignition conditions
- ●Equipped with short-circuit energy suppression measures to protect target equipment
- ●Low output voltage ripple (2%)
- ●Output voltage is continuously adjustable over a wide range

Parameter Table

model	FD-5MW/10/4.5
Input voltage	Three-phase AC10kV
Rated capacity	5MVA
Rated output voltage	200kV
Rated output current	25A
Output voltage ripple	±2%
Voltage rise time	80ms
Voltage drop time	Less than 100us
DC bus voltage	5000V
Inverter frequency	150Hz
Operation Mode	Steady-state operation
Cooling method	Water Cooling

High voltage module



Product Introduction

It is suitable for medical equipment, security inspection equipment, high-energy physics experimental equipment, and provides low ripple DC high voltage for detectors such as photomultiplier tubes and 3He tubes, or provides charging voltage for high-voltage capacitors.

Features

- ●Output voltage is linearly and continuously adjustable
- ●Metal case six-sided shielded package, output ripple as low as 20 mV
- ●High output voltage stability, extremely low time drift and temperature drift
- ●Ultra-wide operating temperature range: -40℃ to +105℃
- ●With input reverse connection protection function and control voltage overvoltage protection
- ●Output short circuit, over current protection
- ●EMI meets CISPR32/EN55032 CLASS B
- ●Chip-level localization

Parameter Table

model	Input voltage	Output voltage	Output Current
PRS-HO1-P401V-5C	12V	0~+400V	0~5mA
PRS-NO1-P401V-5C	12V	0~-400V	0~5mA
PRS-HO1-P102V-3F	24V	0~+1000V	0~3mA
PRS-HO1-N102V-3F	24V	0~-1000V	0~3mA
PRS-HO1-P1501V-1.5F	24V	0~+1500V	0~1.5mA
PRS-HO1-P1501V-1.5F	24V	0~-1500V	0~1.5mA
PRS-HO1-P202V-1.0F	24V	0~+2000V	0~1.0mA
PRS-HO1-P202V-1.0F	24V	0~-2000V	0~1.0mA
PRS-HO1-P502V-0.4F	24V	0~+5000V	0~0.4mA
PRS-HO1-N502V-0.4F	24V	0~-5000V	0~0.4mA

AC/DC Module

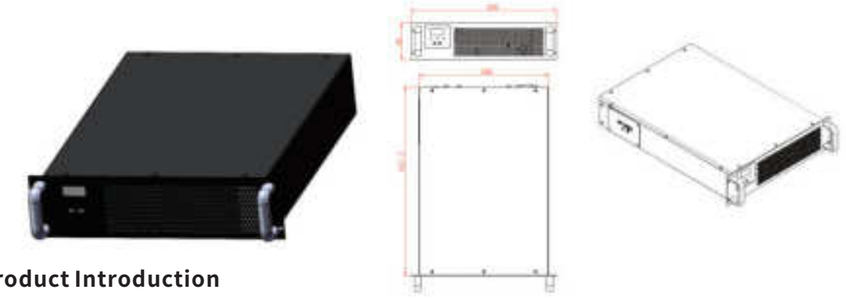

Product Introduction

A 30kW AC/DC charging module with high efficiency, high power density and high reliability, supporting 260-485V AC three-phase four-wire input, and an adjustable output voltage range of DC200-1000V. The charging module adopts a drawer-type design, which is convenient for installation and easy to realize multi-module parallel connection. It uses an isolated CAN communication interface to connect to the system monitor. Through system monitoring, the output voltage mode of the charging module can be set, and functions such as voltage regulation, current limiting, and module power on and off can be realized.

Features

- ●Supports bidirectional operation and has four-quadrant operation function, and is widely used in charging and discharging equipment
- ●High efficiency, overall efficiency up to 92%, power factor up to 0.95
- ●Support multi-module parallel function to realize combined application of different powers
- ●Adopt drawer-type module design structure, easy to disassemble and assemble
- ●With remote communication function, supporting RS485 and CAN communication
- ●With multiple protection functions, input overvoltage, output overvoltage, output overcurrent, output overpower protection
- ●Two cooling methods: air cooling and water cooling
- ●Chip-level localization, military standards

Parameter Table

Basic indicators	
Product size (mm)	84(height)×300(w idth)×437(depth)
Overall efficiency	> 92%
Cooling method	Forced air cooling or w ater cooling, optional
Parallel function	support
Communication	CAN bus, RS485 communication
Input characteristics	
Input voltage	285Vac ~ 485Vac three-phase + PE
Input Current	< 40A
Grid frequency	45Hz ~ 65Hz
Output Characteristics	
Output voltage	1000Vdc
Rated current	30A
Maximum output pow er	30kW
Voltage stabilization accuracy	≤1%
Steady flow accuracy	≤1%
Current imbalance	≤5%
Environmental conditions	
Operating temperature	-40 ~ +75℃
Storage temperature	-40 ~ +75℃
Relative humidity	≤95% RH, non-condensing

Grounding Monitor



Product Introduction

The FD-GFGC-D1VX is a microprocessor based combination ground wire monitoring, ground fault relay, resistance grounded or solid grounded system. It continuously monitors the integrity of the ground conductor to protect portable equipment from hazardous voltages caused by ground faults. The FD-GFGC-D1VX is used to monitor tow cables on large mobile equipment such as cables, mining shovels, shore to ship power cables, dock side cranes, stackers and reclaimers, submersible pumps and portable conveyors.

Features

- Adjustable fault current, supports 11 levels of current adjustment, suitable for applications with different current levels
- Adjustable time delay (0.1-2.5 s), adjustable tripping delay for fast protection
- LED indication, open circuit or short circuit to ground check makes it easier to find faults
- Support CT circuit monitoring, alarm when CT is not connected and short circuit
- With ground fault monitoring and insulation resistance monitoring functions
- Zener terminal assembly provides reliable ground check loop verification
- Microcontroller redundant working mode ensures stable and reliable operation of the equipment

Parameter Table

Power supply	25VA,120-240Vac(+10/-45%), 50-400Hz;15W, 110-250Vdc(+10/-25%)	
Product size	98x130x213mm	
Ground Fault Circuit	Digital Filter	50-60Hz Bandpass
	3dB response frequency	30-90Hz
	Trip level setting	.5、.75、1.0、1.5、2.0、2.5、3.0、5.0、7.5、10.0、12.5A
	Trip time setting	.10、.20、.30、.4、.50、.70、1.0、1.3、1.6、2.0、2.5s
	Heat resistance	150A continuous operation/1000A(2.5s)
	Sensor lead resistance	2Ωmax
	Trip level accuracy	5%/0.1A
	Tripping time accuracy	+50/-15ms
	Sensor Validation	Enable or disable
	Sensor Fault Detection	Open or short circuit
	Trip mode	locking
	Open circuit voltage	24Vdc
	Output Impedance	136Ω
	Loop Current	105mA
Ground Check Circuit	Closing time	≤750ms
	Trip resistance standard	28Ω±10%
	Tripping time at 50 Ω standard	220±30ms
	Short circuit detection	support
	isolation	3kV,60Hz,1s
	Trip mode	Locking or non-locking
Trip relay	CSA/UL contact rating	Resistor 250Vac, 5A30Vdc, 0.25HP, B300
EMC Tests	Radiated and conducted emissions	EN60255 - 26:2009CISPR22:2008-09ClassA
	Current harmonics and voltage fluctuations	IEC 61000-3-2 and IEC 61000-3-3 Class A
	Electrostatic Discharge	IEC 61000-4-2 ±6kV contact discharge; ±8kV air discharge
	Radiated RF immunity	IEC 61000-4-3 10V/m,80-1000MHz,80%AM(1kHz)
		10V/m,1.0-2.7GHz,80%AM(1kHz)
	Fast transient	IEC 61000-4-4 Class A: ±4kV
	Surge immunity.	IEC 61000-4-5: ±1kV differential mode ±2kV common mode
	Conducted RF immunity	IEC 61000-4-6 10V,0.15-80MHz,80%AM(1kHz)
	Magnetic field immunity	IEC 61000-4-8 50Hz and 60Hz 30A/m and 300A/m

Fullde Electric

Motor simulated load

Product Introduction

The motor and its mechanical load are realized through electrical simulation, using a specially customized converter plus a pure resistance load, and a static power electronic system to simulate the motor operation. It can also be used in microgrids for motor fault analysis.

Features

- "Dynamic active load" with "motor characteristics"
- Strong anti-interference ability
- It has dynamic mathematical models for asynchronous motors, synchronous motors and common mechanical loads. It can be used to simulate transient processes represented by constant torque loads, constant power loads, fan loads, port characteristics of asynchronous motors or synchronous motors, steady-state operation of motors under no-load and load, motor load addition and subtraction, power supply mutation, motor start-up, etc. The motor load has adjustable starting characteristics, high-speed and low-speed load characteristic curves of the motor, etc.

Parameter Table

project	**Voltage**	≤3000V
enter	**Input rated voltage**	3-phase 50/60Hz, ≤3000Vac
	Voltage fluctuation range	±10% full load operation
	Frequency range	±10%
Output	**Input current harmonics**	<3.5% Meets IEEE519-1992 and GBT 14549-93 standards
	Output voltage range	≤3300V
	Output Current	400A
Output frequency range		0~400Hz
Start-Stop Control		Local, remote or communication
Overload capacity		120% rated current, 30s
Overall efficiency		≥97%
System protection		Output overload, input overcurrent, input overvoltage, controller overtemperature, cooling fan failure alarm, door switch interlock protection, etc.
Mean time between failures		50000 hours
Communication interface		Modbus, 485 can be customized
Switching quantity		10 channels, relay dry contact input; 16 channels, relay dry contact output
Analog input		4-way, 4~20mA or 0~10V input; 5-way, 4~20mA or 0~10V output
Ambient temperature		-10℃~+40 ,+40 ~+50 deratingoperation;below-10 ,preheatingis requiredbeforestarting
Total equipment noise		≤75dB
Cooling method		Forced air cooling
Protection level		IP31

Helicopter medium frequency power supply

Product Introduction

The rated frequency of the helicopter medium frequency power supply is 400Hz, and the output rated voltage is 115/200V three-phase medium frequency AC. It is specially designed for aviation and electronic and electrical equipment. It can be used for aircraft and airborne equipment, radar, navigation and other electronic equipment, as well as other occasions that require 115V400Hz medium frequency power supply. The power supply is based on a 16-bit microcontroller and power electronic devices as the power output unit. It adopts new technologies and modular structures such as digital frequency division, phase locking, waveform instantaneous value feedback, SPWM pulse width modulation, IGBT output, etc. It has strong load adaptability, high efficiency, good stability, good output waveform quality, simple operation, small size, light weight, intelligent control, abnormal protection function, adjustable output frequency, fast output response speed, strong overload capacity, fully isolated output, long life and damage resistance.



Features

- ●Possessing excellent electrical performance of 400Hz medium frequency power supply
- ●With cut-off function, it can adapt to impact loads such as motors and rectifiers
- ●The power supply is equipped with a shock-absorbing device to prevent vibration and impact
- ●Power supply modular design, unique fault self-diagnosis function, convenient and fast maintenance

Parameter Table

project	parameter
Input voltage	380Vac±10%, three-phase four-wire system (3PH+PE), 50±5Hz
Input power	≥45kW
Rated output voltage	115V±3V
Rated output current	87A
Output frequency	400±4Hz
Overload capacity	130A/120s; 174A/5s;
Voltage Steady State Performance	When the unbalanced current reaches 15%, the maximum deviation of each phase voltage is 3V
Voltage waveform	Sine, distortion <5% (linear load), crest factor 1.41±0.1
Phase Shift	Phase difference is 118°-122°
Operating temperature	-20℃～＋65℃
Relative humidity	93%±3%
Saturated vapor pressure	The daily average value is less than 2.25e-3MPa, and the monthly average value is less than 1.85e-3MPa, and there is condensation.
Altitude	≤2000m
Roll	±45 (8-13s)
Pitch	±10 (5-8s)
earthquake intensity	≤7 degrees
Operating conditions	Indoor operation
Filth Level	Not less than Ⅲ

Helicopter DC Power Supply

Product Introduction

The DC28.5V helicopter DC power supply adopts phase-shifted full-bridge conversion technology, which uses inverter technology to convert 50Hz industrial frequency power into 28.5V DC power for aircraft startup and power-on inspection of airborne equipment. It has excellent performance indicators and high reliability. Fixed and mobile types can be provided according to user requirements. It has fast dynamic response, strong overcurrent capacity, low output ripple, small size, light weight, low noise, simple operation, etc. The power supply is supplied through ships, apron wells, and terminal cabinets to meet the power requirements of aircraft inspection and maintenance. Application areas: aircraft, helicopters, aircraft manufacturers, aerospace equipment manufacturers, aviation repair stations, aprons, air bridges, boarding gates, towers, instrument control centers, air force detection systems, army detection systems, naval detection systems, military equipment, national defense, military research and development units, submarines, electric, turbine engine manufacturers, etc.



Features

- ●The power device uses IGBT, which uses the high frequency and low loss characteristics of the IGBT switch mode to complete the power conversion. It has the characteristics of small size, light weight and high reliability.
- ●High stability and reliability
- ●Easy operation and intuitive display
- ●Adaptable to various types of loads and mixed loads such as resistive, capacitive, inductive, etc.
- ●Output has cut-off function
- ●The power supply is equipped with a shock-absorbing device to prevent vibration and impact

Parameter Table

project	parameter
Input voltage	380Vac±10%, three-phase four-wire system (3PH+PE), 50±10Hz
Input power	≥25kW
Output voltage	DC 28.5V±0.9V;
Output Current	≤400A
Overload capacity	600A/300s; 800A/120s; 1200A/5s;
Cooling method	Forced air cooling
Box size	600*550*1200mm
weight	300kg
Cabinet color	703500%
Hoisting method	Removable lifting ring
Operating temperature	-20℃～＋45℃
Relative humidity	93%±3%
Saturated vapor pressure	The daily average value is less than 2.25e-3MPa, and the monthly average value is less than 1.85e-3MPa, and there is condensation.
Altitude	≤2000m
Roll	±45 (8-13s)
Pitch	±10 (5-8s)
earthquake intensity	≤7 degrees
Operating conditions	Indoor operation
Filth Level	Not less than Ⅲ

High-level power supply

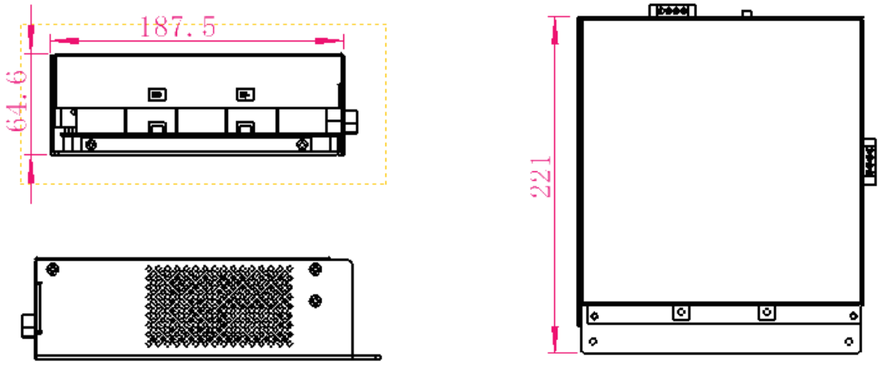

Product Introduction

A driving power supply for high-voltage DC transmission. It requires a wide input voltage range (350-4000V) and can work in a high voltage state for a long time. It also has perfect overvoltage and undervoltage protection, and the fault signal is sent in the form of an optical signal. The power supply has two outputs (two 16V outputs and two 200V outputs).

Features

- ●High voltage, wide range input: can work normally at 350-4000V
- ●No need to connect other external startup circuits: it can work by connecting to the appropriate voltage
- ●ESafety and reliability: The device has input and output over-voltage and under-voltage protection and short-circuit protection

Parameter Table

Project		Index
Input characteristics	Input DC voltage	350 V dc - 4000 V dc
Output Characteristics	Output voltage V1	16Vdc
	Output voltage V2	200Vdc
	16V output power	16W
	200V output power	2W
Overvoltage and undervoltage protection	V1≥17V	Fiber optic light goes out
	V1≤15V	Normal operation and fiber optic is off
	V2≥240V	Fiber optic light goes out
	V2≤180	Protection and fiber optic extinguishing
Output short circuit protection		When the current is too large, the output will be blocked
efficiency		60%
size	Length × Width × Height	200×180×45mm

Fullde Electric

Armored UAV Power Supply

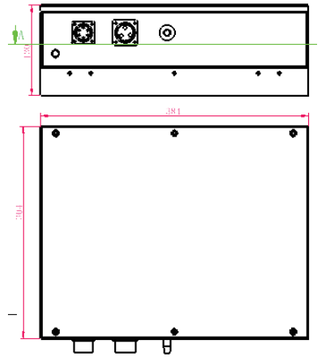



Product Introduction

FD-AC230V-10kW series products adopt a new generalized integral control algorithm and unique harmonic control technology, with wide voltage input range, wide frequency input range, stable output voltage, high output voltage accuracy, small output harmonics and other characteristics. The equipment is small in size, highly integrated, and adopts modular design, which can realize the use of multiple modules in parallel. It can be upgraded to modules of different powers to provide product series with different output powers (20kw/30kw). The product has multiple protection functions: output overvoltage protection, undervoltage protection, output overload protection, overload protection, and output short circuit protection. This product is widely used in drones, armored vehicles, light ships and other fields, and can serve as an energy conversion device for the generators of these equipment.

Features

- ●Wide voltage input range: supports three-phase AC 300Vac~500Vac input
- ●Wide frequency input range: 350Hz ~ 450Hz
- ●Small size, integrated, modular design, supports multi-module parallel connection
- ●Support CAN and RS485 communication

Parameter Table

Product Model	FD-AC230V-10kW		
Input three-phase voltage	Three-phase 300 - 500 V	Voltage transient regulation	±20%
Input single-phase auxiliary voltage	Single phase 12-20V	Voltage stabilization time	≤1s
Input frequency	350 - 450Hz	Voltage fluctuation rate	≤±1%
Rated output voltage	Single phase 230 V	Steady state frequency regulation	≤2%
Rated output power	10 kW	Frequency transient regulation	±5%
Output frequency	50 Hz	Frequency stabilization time	≤1s
Voltage sine wave distortion rate	≤5%	Frequency volatility	≤1%
Voltage adjustment range	≥95%～105%	Overall efficiency	≥90%
Voltage thermal offset	≤2%	Communication	CAN communication, RS485 communication
Voltage steady state regulation	≤2%	Chassis size	384x304x103mm

Servo power supply

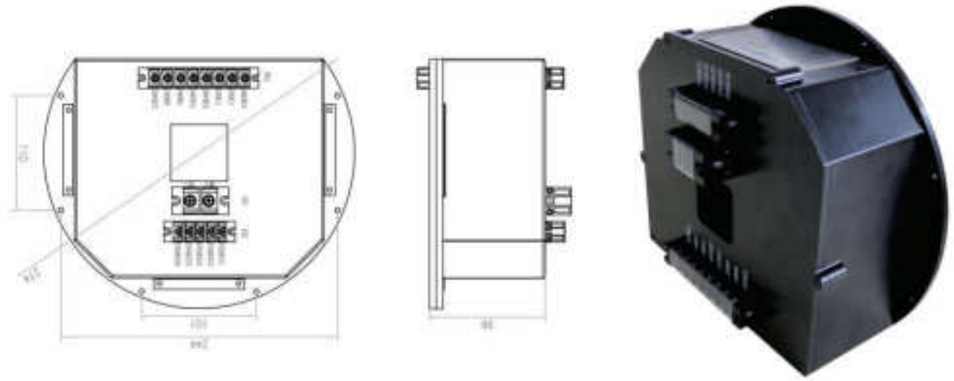

Product Introduction

The power supply is used in marine/automotive/aviation applications. It is a high-efficiency DCDC power supply with DC input and multi-channel isolated DC output.

Features

- Small size, high power density, power supply size: 220x274x136mm
- Small power output ripple
- The system power supply has high efficiency, reaching over 85%
- Multiple channels isolated from each other
- Military Standards

Parameter Table

Project	Index
Input voltage range	182Vdc～382Vdc (nominal 282V)
Rated output voltage	48Vdc1、48Vdc2、24Vdc1、24Vdc2、24Vdc3、24Vdc4
Rated output current	25A、5A、5A、4.2A、5A、21A
Input and output isolation	Input and output isolation
Output voltage regulation accuracy	≤±3%
Ripple and noise	≤200mVpp; ≤100mVpp@24Vdc1; ≤300mVpp@24Vdc4
Overcurrent protection	≥110% nominal output current
Overvoltage protection	1.1～1.2Vo
Short circuit protection	Self-recovery
Typical efficiency	≥85%
Gliding mode power consumption	≤9W
Enable Response	≤300ms
other	CE101, CE102 satisfy GJB150B-2013

Fullde Electric

Servo power supply protection device





Product Introduction

The motor output power supply system in the generator output load system used in the fields of marine/automotive/aviation, etc., converts the electricity generated by the generator into direct current to provide energy for the subsequent system, and also provides adjustable output protection function.

Features

- The product is small in size, size: 164x120x35mm
- Wide working range, can work normally at low and high speed of the generator
- Protection: With overvoltage output protection (protection adjustable), overcurrent protection, etc.

Parameter Table

Project		Index	Remark
Input characteristics	Input voltage 1	Three-phase: 90~900Vac (main circuit)	Motor rated voltage 674V (speed 7500), frequency 375Hz
	Input voltage 2	17.2~172Vac (auxiliary power supply)	
Output Characteristics	Rated output voltage	Rectification output 560V overvoltage protection	
	Output Current	20A	
	Protection features	Output voltage 560Vdc overvoltage protection	Protection is self-recovery
	Cooling method	Air Cooling	
	Structural dimensions	164 x 120 x 35mm	

Low ripple module power supply

Product Introduction

This power supply is used in low ripple power supply systems, such as marine, automotive, aviation, medical, instrumentation, etc.



Features

- ●Small size, high power density, size: 242*100*63mm
- ●Small output ripple: ⩽10mVpp
- ●The power supply has hot backup redundancy and is powered by external AC220V and DC24V
- ●Design standard: Designed according to military standards

Parameter Table

Project		Technical indicators	Remark
Input characteristics	Input voltage 1	220Vac±20%	Automatically switches to DC power supply when AC power is off
	Input frequency	50Hz±3Hz	
	Input voltage 2	24Vdc(20-36)	
Output Characteristics	Rated output voltage 1/current 1	+24Vdc/12.5A	300W
	Rated output voltage 2/current 2	+24Vdc/2.08A	50W
	Output voltage regulation accuracy	≤±1%	
	Loading Effect	≤±1%	
	Ripple and noise	≤10mVpp	Bandwidth 20Mhz
	Overcurrent protection	≥1.1 ~1.3 rated	
	Overvoltage protection	≥1.1 rated	
	Short circuit protection		Self-recovery
	Overheat protection		Self-recovery
	Structural dimensions	220x100x63mm	Fully enclosed aluminum alloy housing
	Communication	RS422	Output two-way voltage and current collection and upload; sampling accuracy 2%, fault indication
efficiency	Module efficiency	≥80%	
Low temperature test	Low temperature storage	Temperature -55℃, keep warm for 24h, return to room temperature for testing, meet all electrical performance requirements	
	Low temperature operation	Temperature -40℃, keepwarmfor4h, powerontest, all electrical performancesaremet.	
High temperature test	High temperature storage	Temperature +70℃, maintainfor48h, return to room temperature for testing, all electrical performancesaremet.	
	High temperature work	The power supply should meet all electrical performance requirements when operating for 2 hours at a temperature of +55°C.	
Damp heat test	Constant moist heat	GB/T 25119-2010	
	Electromagnetic compatibility test	CE101 of GJB151B-2013	

Shore power supply



Product Introduction

The shore power stabilized power supply converts the unstable three-phase 380V/50Hz AC voltage into a stable three-phase 390V/50Hz adjustable AC voltage to supply power to the electrical equipment. The electrical equipment has high requirements for the technical indicators, reliability, stability, etc. of the stabilized power supply. The power supply focuses on the electrical design and the whole machine process design to ensure that the power supply system meets the power supply indicators of the ship, and ensures the continuity and reliability of the power supply of the power system. At the same time, the advancement, maintainability, electromagnetic compatibility, whole machine efficiency, grid-side harmonic control, process structure, maintainability, electromagnetic compatibility, etc. of the power supply are taken as design focuses.

Features

- ●The overall size is no larger than a 20-foot standard container and can be used as a mobile voltage-stabilized power supply.
- ●Protection level: Ip56
- ●The three phases are regulated and stabilized separately, and the three phase voltage is steplessly adjusted within the adjustable range
- ●Pressure adjustment strain time: ⩽0.05s
- ●Overload capacity: twice the rated current, for one minute
- ●Monitor LCD panel: can display operating status and operating parameters
- ●Basic functions include: automatic voltage regulation, adjustable output voltage, overvoltage protection, undervoltage protection, overload alarm, short circuit protection, bypass function, phase sequence switching, phase loss protection, emergency shutdown, sound and light alarm prompts, etc.

Parameter Table

Model	SFC804AC01	SFC105AC01	SFC165AC 01	SFC165AC02
Input voltage	380Vac ± 20%			
Output voltage	Three-phase 390Vac adjustable			
Voltage stabilization accuracy	1%-5% adjustable			
Overload capacity	Double rated current for 1 minute			
Response time	0.5s (when external voltage changes by 10%)			
efficiency	98%			
Output Channel	one Road			two Road
Capacity(kVA)	800	1000	1600	800+800
Dimensions (mm)	3600*1500*2200	4000*2500*2600	4500x2000x2600	6000*2350*2600

Solid-state DC circuit breakers



Product Introduction

Solid-state DC circuit breakers are used as fast protection devices for DC power grids in DC distribution networks, such as the new all-electric ship-berthing integrated power distribution system, as fast switches for connecting and feeding multiple DC power grids. The product can flexibly protect each DC sub-grid when a short circuit occurs at any position in the DC system. The circuit breaker fault detection, judgment, and execution time can be achieved within 10us for the entire series.

Features

- The combination of semiconductor devices and digital systems can achieve flexible and intelligent control
- Fast response speed, with microsecond breaking speed, capable of accurately controlling the breaking moment
- No arc when disconnected
- The protection time can be set, and it can be operated according to the preset current time curve. Users can make different protection settings according to their needs.
- CCS certification, chip-level localization

Parameter Table

Voltage level	1~10kVdc
Rated operating current	500~5000Adc
Overall efficiency	> 99%
Cooling method	Water cooling or air cooling
Work Environment	-20~50℃
Maximum breaking current	100kAmax
Break time	10us~100us optional and adjustable
Auxiliary power supply	285Vac ~ 485Vac three-phase + PE/24V
Workplace	indoor

KYN-12 armored removable indoor metal enclosed switchgear



Product Introduction

KYN-12 is an armored removable indoor metal-enclosed switchgear (hereinafter referred to as switchgear), which is a complete set of power distribution equipment for 3.6~12kV three-phase AC 50Hz single busbar and single busbar segmentation system. It is mainly used for power transmission in power plants, small and medium-sized power stations, power distribution in industrial and mining enterprises and institutions, and power transmission in secondary substations of power industry systems and starting of large high-voltage motors, etc., for control, protection and monitoring. It has interlocking functions to prevent the push and pull of circuit breaker trolleys with load, prevent the circuit breaker from being opened and closed by mistake, prevent the circuit breaker from being closed when the grounding switch is in the closed position, prevent the circuit breaker from being mistakenly entered into the live compartment, and prevent the grounding switch from being mistakenly closed when it is live. It can be equipped with both VS1 vacuum circuit breakers and ABB's VD4 vacuum circuit breakers. It is indeed a power distribution equipment with superior performance.

Parameter Table

project			unit	parameter
Rated voltage			kV	3.6、7.2、12
Rated frequency			Hz	50
Rated current			A	630、1250、1600、2000、2500、3150
Rated short-time withstand current			kA/4S	16、20、25、31.5、40
Rated peak current			kA	40、50、63、80、100
Rated short-circuit breaking current			kA	16、20、25、31.5、40
Rated short-circuit making current (peak value)			kA	40、50、63、80、100
Auxiliary voltage for opening and closing Rated voltage of auxiliary circuit			V	DC110、220 ,AC110、220
Rated insulation level	1 min power frequency withstand voltage	Between poles, between poles and ground	kV	24、 32、 42
		Between fractures	kV	24、32、48
	Lightning impulse withstand voltage (peak value)	Between poles, between poles and ground	kV	40、60、75
		Between fractures	kV	46、70、86
Protection level				The housing is IP4X, and the compartment and circuit breaker room doors are IP2X when opened

GGJ low voltage reactive power compensation device



Product Introduction

GGJ low voltage reactive power compensation device is used in substations and workshops of industrial and mining enterprises, in three-phase power systems with AC 50Hz voltage below 380V, to automatically improve the power factor of the power grid.

Parameter Table

project	unit	Technical Parameters
Rated operating voltage	V	380
Rated insulation voltage	V	660
Rated operating current	A	520-65
Rated compensation capacity	kVar	480-60
Rated short-time w ithstand current	kA	15
Sw itching components		Electromechanical sw itches, compound sw itches, semiconductor electronic sw itches
Compensation		Three-phase compensation, single-phase compensation, combination of three-phase and single-phase compensation
Protection level		IP30、IP40
Overall dimensions (w idth*depth*height)	mm	600（800、1000）*800（600、1000）*2200

Fullde Electric

GN□-12(F)、XGN□-12(FR)
box-type fixed indoor AC metal-enclosed switchgear

Product Introduction

XGN-12 series box-type fixed indoor AC metal-enclosed switchgear is also called box-type fixed indoor AC metal-enclosed ring network switchgear (hereinafter referred to as "ring network cabinet"). It is a new generation of metal-enclosed switchgear with sulfur hexafluoride load switch as the main switch and air insulation for the whole cabinet, suitable for distribution automation, which is compact and expandable.

The ring main unit has the characteristics of simple structure, flexible operation, reliable interlocking, etc. It can provide satisfactory technical solutions for various application occasions and different user requirements. The adoption of sensor technology and the latest protection relays, coupled with advanced technical performance and light and flexible assembly solutions, can meet the requirements of market changes.



Parameter Table

project			unit	Technical Parameters		
				XGNQ-12(F)	XGNQ-12(F-R)	XGNQ-12(Z)
Rated voltage			kV	12	12	12
Main bus rated current			A	630	630	630
Maximum rated current of fuse			A		125	
Rated insulation level	1 min w ork Frequency Withstand Voltage	Phase, to ground	kV	42	42	42
		Isolation fracture	kV	48	48	48
	Lightning strike Withstand voltage	Phase, to ground	kV	75	75	75
		Isolation fracture	kV	85	85	85
Auxiliary and control circuit lmin pow er frequency w ithstand voltage			V	2000	2000	2000
Rated frequency			Hz	50	50	50
Rated short-circuit making current (peak value)			kA	50		80
Rated peak w ithstand current			kA	50		80
Rated transfer current			A		1500	
Main circuit rated short-time w ithstand current/time			kA/s	20/2		31.5/4
Rated short-time w ithstand current/time of ground loop			kA/s	20/2		31.5/4
Control circuit rated voltage			V	DC:220/AC:220	DC:220/AC:220	DC:220/AC:220
Mechanical life (load sw itch/grounding sw itch)			Second-rate	5000/2000	5000/2000	10000/2000
Protection level				IP3X	IP3X	IP3X

DFW series cable branch box (European style, American style)



Product Introduction

Cable branch boxes (divided into European and American types) are suitable for outdoor distribution networks with AC 50Hz, rated voltage 12kV, and cable inlet and outlet lines. They are widely used in urban power grid transformation, residential areas, commercial centers and other densely populated areas in cities.

Parameter Table

project	unit	Technical Parameters
Rated voltage	KV	12
frequency	Hz	50
Rated current	A	630
1 min pow er frequency w ithstand voltage	kV	42
Lightning impulse w ithstand voltage	kV	75
Protection level		IP44

MNS1、GCS、GCK、GGD low voltage switchgear



Product Introduction

Low voltage switchgear is suitable for power plants, substations, petrochemical, metallurgical steel rolling, light industry and textile factories and mines, residential areas, high-rise buildings and other places. It is used for power conversion, distribution and control of power distribution equipment in power systems with AC 50Hz and rated working voltage AC 380V.

The products comply with the requirements of IEC60439-1 "Low-voltage complete switchgear and control equipment", JB/T9661 "Low-voltage withdrawable complete switchgear", GB7251.1 "Low-voltage complete switchgear and control equipment" and other standards.

Parameter Table

project		unit	Technical Parameters			
			MNS	GCS	GCK	GGD
Rated insulation voltage		V	660			
Rated insulation voltage	Main circuit	V	380			
	Auxiliary circuit		380、220			
Rated frequency		Hz	50			
Horizontal busbar rated current		A	6300		4000	3150
Vertical busbar rated current		A	630-1250			
Rated short-time w ithstand current of horizontal busbar (1S)		kA	50/65/80/100		105/143/175	15/30/50
Horizontal bus rated peak w ithstand current		kA	105/143/175/220		50/65/80	30/63/105
Rated short-time w ithstand current of vertical busbar of MCC cabinet (Is)		kA	30/50			-
Rated peak w ithstand current of vertical busbar of MCC cabinet		kA	76/105			-
Enclosure protection grade			IP30、IP40			

YBD-12/0.4
series high voltage/low voltage prefabricated substation



Product Introduction

YBQ-12/0.4 series high-voltage/low-voltage prefabricated substations are suitable for various places such as industrial parks, residential areas, commercial centers, highways, stations and airports, construction sites, etc. The box-type transformer consists of a combined transformer and corresponding low-voltage switchgear.

This product places high-voltage load switches and high-voltage fuses in transformer oil, and has two structural forms: the transformer body is in a common box or in separate boxes. The combined transformer can be made of products produced by Shanghai ABB Transformer Co., Ltd., or the domestic S9-S11 series transformers. The high-voltage power receiving equipment uses a specially designed 10kV load transfer switch, plug-in flame breaker and high-voltage elbow cable plug. The structure is greatly simplified, which can not only meet the needs of various power supply methods such as terminals and ring power supply networks, but also reduce the size of the box transformer.

The low voltage switchgear adopts high breaking capacity strip flame breaker load isolating switch and novel low voltage cable terminal technology, which achieves the effect of small size and quick and easy assembly. The low voltage switch can also adopt high breaking capacity knife fuse switch or molded case switch.

Parameter Table

project		unit	Technical Parameters
Rated voltage		kV	12/0.4 (high pressure/low pressure)
Rated frequency		Hz	50
Rated capacity		kVA	100-1000
1 minute power frequency withstand voltage	High voltage load switch	kV	To ground and between phases 42, break 48
	transformer		35
Lightning impulse withstand voltage		kV	75
High voltage backup fuse breaking current		kA	50
Plug-in flame breaker breaking current		kA	2.5
Ambient temperature		℃	-65
Allowable coil temperature rise		℃	65
Noise Level		dB	<50
No-load voltage regulation			±5% or ±2x2.5%
Cooling method			Oil-immersed self-cooling
Protection level			IP43

AC/DC Electronic Load



Product Introduction

AC/DC load is an electronic load compatible with AC/DC input, which can simulate load tests in real environments, such as AC generator system tests or DC power supply, battery and other system tests. It is widely used in ships, aircraft, generator sets, power supply equipment tests, aging degradation, electrical parameter performance tests, scientific research/production and education, etc. The working modes include constant current, constant power, constant resistance, etc., and the working modes can be freely combined.

Features

- The AC and DC loads adopt the IGBT+resistor energy dissipation architecture, which can simulate R, RL or RC loads.
- It has multiple operation modes such as constant current, constant resistance, constant power, etc.
- High control accuracy, fast response speed, high conversion efficiency, and small harmonic component injected into the power grid
- Modular design, high reliability and easy maintenance

Parameter Table

project	Technical indicators	
Load Model	PRS-ELD-154AD01	
Load Name	AC and DC loads	
Rated voltage	DC part: DC680V±10%	AC part: three-phase four-wire AC380V
Rated active power	DC part: power 150kW (DC680V)	AC part: Resistive 150kW
Loading Function	DC part: Discharge current is continuously adjustable , with constant current discharge and constant power discharge functions	AC part: steady-state test , setting test (100S), fluctuation test, sudden addition test, sudden unloading test, harmonic analysis (2nd to 50th order), waveform analysis (5 modes)
Control method	Local (near the machine) + remote control (reserved host computer interface)	
Power frequency withstand voltage	AC2000V, 50Hz (1min), no breakdown, no flashover	
Current	DC partial discharge current 1~220A	AC part rated current 200A
Load accuracy	≤±3%	
Total voltage measurement accuracy	≤ 1%	
Load control parameters	Displays basic functions such as voltage, current, power, and operating time , and can calibrate and correct the total voltage and current of the battery pack.	
How it works	Continuous work	
Cooling method	Forced air cooling, side air inlet, top air outlet	
Insulation class	F-Class	
Protection level	IP55 when in storage, IP21 when in operation	
Measurement accuracy	Level 0.5	
Power supply	AC380V, 50Hz, three-phase five-wire system, with phase sequence protection, automatic phase sequence switching function, about 10kW	
Transportation method	Lifting or forklift, with load-bearing lifting ring on the top	
Workplace	Indoor/Outdoor	
weight	About 700kg	
Load Extension	1. Multiple loads of the same level can be connected in parallel, and the expanded loads can be automatically identified and controlled synchronously 2. When two or more load boxes are controlled synchronously in parallel, any load box is not allowed to drop load ;	

Battery charge and discharge test cabinet

Product Introduction



This equipment is mainly used for electrical performance testing in battery material laboratories and battery pack manufacturers, and is suitable for performance testing of lithium battery packs/lead-acid battery packs, etc. The test contents include: battery cycle test, life test, battery capacity test, DCR test, battery charge/discharge characteristic test, battery charge retention ability test, battery charge/discharge efficiency test, battery depth/constant voltage discharge test, battery overcharge/overdischarge tolerance test, battery dynamic test, battery ramp discharge/pulse discharge test, constant power charge and discharge test, etc.

Features

- ●High energy-saving efficiency, energy is fed back to the grid during discharge, and energy consumption is low
- ●The loop control adopts DSP control solution, and the external 16-bit ADC ensures the stability and accuracy of the equipment. The equipment voltage accuracy reaches 0.05% FS+RD), and the current accuracy reaches 0.05% (FS+RD)
- ●The internal dual-loop control device has no impact current when the channel is started, and there is a seamless transition from constant current to constant voltage without current surge.
- ●DCR test process can be customized to perform relevant tests
- ●The equipment adopts a variety of protection measures, such as temperature, voltage change trend, voltage change rate, current change rate, reverse connection protection, equipment accuracy error alarm, and various parameter comparison alarms in cycle testing.
- ●Single point independence , independent charge and discharge conditions can be set for each channel

Parameter Table

Current	50A、100A、200A、300A、400A、500A、600A、1000A		
aisle	Single point of independence		
Voltage accuracy	0.05% (FS+RD)		
Voltage resolution	1mV		
Current accuracy	0.05% (FS+RD)		
Current resolution	1mA		
Host computer acquisition frequency	10ms/stroke		
Current response time	＜10ms(10%-90%)		
Charge and discharge switching time	≤20ms(-90%-90%)		
Working Mode	Support constant current charging, constant current and constant voltage charging,		
Communication interface	CAN/RJ45		
Cooling method	Air Cooling		
Protection level	IP21		
Maintainability	The system adopts a modular structure, which is easy to maintain and expand.		
Energy Feed Efficiency	0.7	0.85	0.92
Feedback grid current harmonics	<5%		
noise	≤75dB		
Environmental requirements	Ambient relative humidity	10%～90%RH	
	Ambient temperature	-10℃～45℃	
	power distribution	AC 380V (three-phase five-wire system)	

Portable energy storage power supply

Product Introduction





The portable energy storage inverter is the core of the portable energy storage power supply. It has the characteristics of high energy density, high efficiency, convenient and clean interface, fast charging interface, high power output interface, multi-function output, etc. It has UPS-like functions: charge and discharge switching response time (≤10ms), FD800_W8 portable energy storage inverter can provide 800W power output, and the same series of products also include FD800-W20, which is a 2000W portable energy storage inverter.

Features

- ●Soft switching technology, higher efficiency and more reliable operation
- ●High efficiency: charging efficiency ≧90%, discharging efficiency ≧90%
- ●Strong adaptability, high reliability , and powerful grid adaptability design to cope with harsh grid environments
- ●Excellent EMC characteristics, easily integrated into the whole system
- ●Low harmonic content, excellent THDI and PF, pure and pollution-free green power module
- ●Contains 800W and 2000W different power product series to meet different application needs

Parameter Table

model		FD800-W8	FD800-W20
Input characteristics	Input DC voltage	DC16.2V-DC25.2V (6 strings)	DC 48V-60V
	Input AC voltage	AC110V ±10%	AC220V ±10%
	Input frequency	50Hz/60Hz	50Hz/60Hz
Output discharge characteristics	Output AC voltage	AC110V ±10%	AC220V ±10%
	Output frequency	50Hz	50Hz
	THD	≦5%	0.05
	Continuous output power	800W	2000W
	Peak output power	1600W	4000W
	No-load power consumption	12W	DC48-60V
Charging characteristics	Output DC voltage power	MAX：600W	MAX：4000W
	Output DC voltage	DC16.2V-DC25.2V (6 strings)	12W
Discharge overload	120%	Work 5min	Work 5min
protection	150%	6S at work	6S at work
	200%	Work 1S	Work 1S
Main protection	Short circuit protection	External short circuit protection	External short circuit protection
	AC output overcurrent protection	The output port is immediately shut down and the alarm indicator flashes for 15 seconds.	The output port is immediately shut down and the alarm indicator flashes for 15 seconds.
	Over power protection		
	Charging overcurrent protection	Current greater than 30A	Current greater than 30A
	Charging overvoltage protection	27V	60V
	Over temperature protection	100℃	100℃
Function	ups	Grid-battery switching <10ms	Grid-battery switching <10ms
performance	Power factor (light load)	≥0.90 @25%～50% full load	≥0.90 @25%～50% full load
	Power factor (medium load)	≥0.98 @50%～100% full load	≥0.98 @50%～100% full load
	Power factor (heavy load)	≥0.99 @100% full load	≥0.99 @100% full load
efficiency	Discharge efficiency (MAX)	≧ 90%(discharge)	≧90%
	Charging efficiency (MAX)	≧ 75%(charging)	≧75%
communication	Communication interface	TTL (5V level)	TTL (5V level)
size	Length × Width × Height	200mm×142.5mm×48mm	245mm×167mm×48mm
other	Lightning surge protection level	National standard level 1	National standard level 1

On-board energy storage UPS power supply

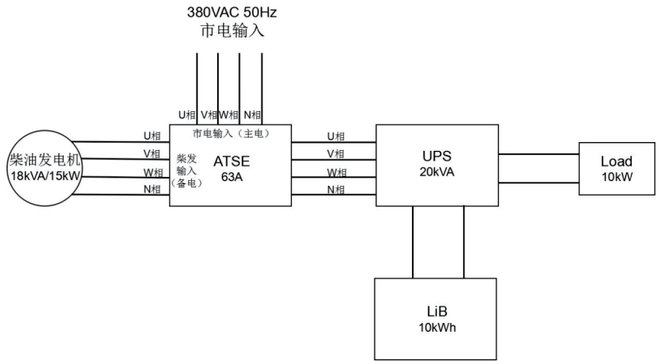

Product Introduction

The on-board energy storage power supply is mainly used for mobile energy storage in vehicles. The system integrates diesel generator, rectifier, DCDC and inverter unit, battery unit and auxiliary system. The two inputs of mains power and diesel generator can be automatically switched, with mains power being used first. When neither mains power nor diesel generator is available, the lithium battery inverter provides load power.

Parameter Table

project	Technical indicators	
AC parameters		
Rated Pow er	20kVA	
Rated input voltage	AC380V	
Rated output voltage	AC220V	
DC parameters		
Battery Type	Lithium iron phosphate battery	
Rated capacity	54Ah	
Nominal voltage	192V	
Operating voltage	168V～219V	2.8V-3.65V
Battery Pack Solution	2P60S	
Rated energy	10.4kWh	
Rated charging current	27A(0.5C)	When the cell voltage is ≥3.65V, stop charging
Rated discharge current	54A(1C)	When the cell voltage is ≤2.8V, stop discharging.
Operating temperature	Charging: 0℃～55	The battery charge and discharge rates are different at different temperatures
	Discharge: -20℃～55	
Appearance parameters		
Box size	800*850*600mm	
Cooling method	Natural cooling	
w eight	220kg	

Medium voltage high power rectifier

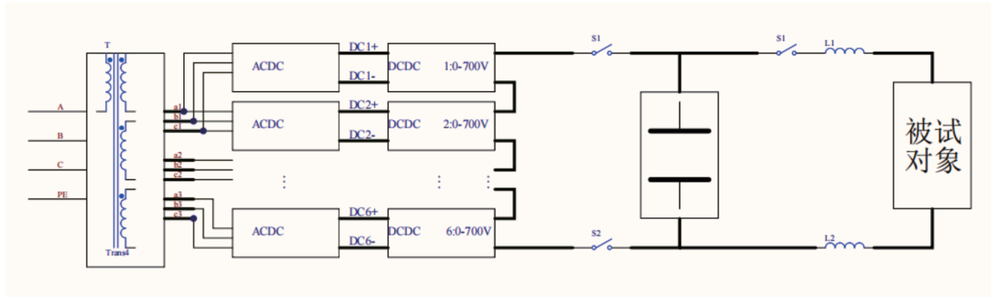

Product Introduction

The high-power adjustable power supply device uses domestic semiconductor (IGBT, diode, thyristor) devices to achieve AC/DC conversion under medium voltage conditions. The equipment is mainly used in laboratories, power grid ice melting, shore power and other occasions. The rectifier includes mature six-pulse, twelve-pulse and twenty-four-pulse rectifier units, which can be freely combined according to the harmonic requirements of the power grid, and the maximum parallel power can reach 150MW.

Parameter Table

project	Index requirements
Rectification method	Three-phase bridge type same-phase anti-parallel connection, double anti-star same-phase anti-parallel connection to achieve 6, 12, 18, 36 pulses
Rated input voltage level	3AC10KV、3AC35KV
Rated input frequency	50Hz±lHz
Output voltage	≤50KV
DC output pow er	≤150MW
Voltage/current display accuracy	1%V/ 1%A
Overload capacity	110% rated pow er overload is allow ed for 1 min
AC side pow er factor	≧ 0.95
DC voltage ripple factor	≤3%FS
Voltage /current control accuracy	≤1%FS
Parallel operation current sharing coefficient	>0.95
Rated efficiency	>93%
Control method	Local/remote (local control by touch screen, remote control by host computer)
Remote communication interface	Serial communication, Ethernet (Profinet)
Cooling method	Forced air cooling , w ater cooling, w ater-air cooling, oil-w ater cooling, oil-air cooling
Protection level	Not less than IP2X
Noise (sound pow er level)	＜ 75 dB (measured 1 m aw ay from the rectifier cabinet)

Medium Voltage Inverter



Product Introduction

This product is a modular inverter designed for high-power applications requiring high reliability. It can meet the stringent requirements of single-motor or multi-motor applications and can be used for speed and torque control of 1-10MW induction motors or synchronous motors. The application areas cover energy, manufacturing, chemical industry, engineering, mining, shipbuilding, scientific experiments and other fields. It adopts 12-pulse three-phase fully controlled rectification technology and three-phase three-level inverter technology, and uses the latest domestic high-performance high-power switching device IGBT, which effectively reduces the complexity of the inverter, improves equipment reliability, and reduces operation and maintenance costs.according to the harmonic requirements of the power grid, and the maximum parallel power can reach 150MW.

Features

- 100% chip-level localization
- Equipped with on-load voltage regulator, the output voltage can be adjusted in a wide range
- Modular design, supports disassembly operation and multiple power supply series and parallel operation

Parameter Table

Output Pow er	6MVA
Rated output voltage	1-3.3kV
Grid supply voltage	10kV
Inverter protection	Overcurrent, short circuit, ground fault, phase lock failure, overvoltage, undervoltage, overtemperature, output frequency, cooling w ater abnormality, communication abnormality
Load Type	Induction motor, synchronous motor
Output Current	2050A
Output frequency	0-250Hz
Efficiency at rated load	>97%
Cooling w ater inlet pressure	200 - 500 kPa(Pressure loss 150kPa)
Protection level	IP32

Fullde Electric

Medium voltage and high current short circuit test bench



Product Introduction

The test bench is mainly used in medium-voltage pulse power supply, military field and medium-voltage high-current pulse test scenarios of DC circuit breakers. It includes intelligent charging unit, energy storage capacitor array, discharge circuit and other parts. While ensuring the discharge current pulse width, the maximum current peak can reach 110kA.

Features

- When the maximum pulse width is 40ms, the discharge peak current can reach 110kA
- Current peak value adjustable in steps
- The patented circuit can achieve high peak current with minimum capacitance while ensuring the discharge waveform pulse is unipolar

Parameter Table

project	Technical indicators	
Charging characteristics		
Input voltage	Three-phase AC380V ±20% 50HZ	
Output voltage	DC0~4200V	
Output Current	0~30A	
Output Pow er	120kW	
Working Mode	Constant current, constant voltage, constant pow er mode	
Cooling method	Air Cooling	
Discharge characteristics		
Rated discharge voltage	4kV	
Peak discharge current	≥110kA	
Discharge loop resistance	10mΩ	
Discharge time	≥40ms	When the current exceeds 70kA
Other requirements	Peak current adjustable, step 10kA	Adjustable range: 30kA-110kA

200kV high voltage charging power supply

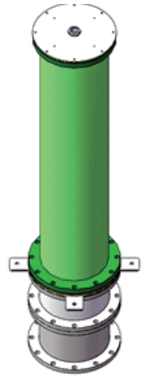

Product Introduction

A high voltage power supply is a power supply device that can output high voltage, and is usually used in scientific research, industrial production and other fields, such as particle accelerators, industrial discharge, high voltage demisting, etc. It can increase the DC or AC voltage to a high voltage of up to thousands of volts or even hundreds of thousands of volts to meet the needs of specific applications.

PRS-DCDC,04248S025-A is a microprocessor-based high-voltage charging power supply. It can boost DC48V input to an adjustable output voltage of 0 to -200kV. It can be used in many applications, such as ion implantation , electrostatic spraying , electrostatic electret , withstand voltage test , particle acceleration , electrostatic field , ion beam power supply , electron beam power supply , accelerator power supply , insulation test , deep sea observation network shore base , high-voltage capacitor charging , high-voltage power supply , high-voltage defogging electrode, scientific research , etc.

Features

- ●Digital control method
- ●Nanosecond response capability
- ●Software customization function
- ●Ultra-high voltage output
- ●Can be customized according to customer needs

Parameter Table

name	Performance Indicators
Input voltage	48V±10% (43~53V)
Rated Pow er	Maximum output pow er 400 W (108M R)
Rated output voltage	-180kV
Voltage Regulation	-100kV～-200kV
Ripple voltage	Under rated output conditions, the maximum ripple voltage is 2k V
Voltage stabilization accuracy	2k V
Ambient temperature	-1 0℃ to+50 (normal temperature)
Stability	Less than 0.05% every 8 hours after 0.5 hours of startup (current limiting mode)
Dimensions	φ428*2048mm
Protection requirements	Overvoltage, overcurrent, overtemperature, arcing, etc.
Voltage build-up time	10s
Protection off time	<100ms
Protection level	IP55
Communication interface	RS485
size	φ428*2048mm
w eight	≤400kg

500W Bipolar Constant Current Source

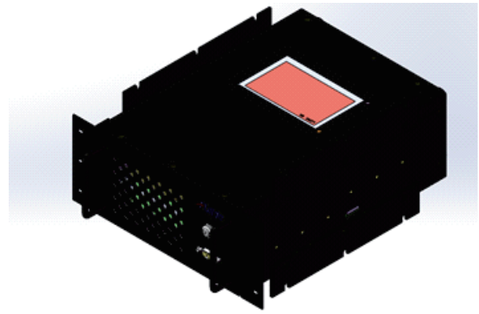

Product Introduction

Programmable bipolar constant current source plays an important role in electronic engineering, scientific research and laboratory environments, and is widely used to simulate and test electronic circuits. It can provide adjustable voltage and current output to meet the needs of different experiments, and supports bipolar output, enabling it to provide stable power supply for positive and negative polarity circuits at the same time.

Features

- ●Supports positive and negative polarity output, and can provide stable power supply for positive and negative voltage circuits
- ●Adjustable voltage and current output range
- ●Positive and negative outputs switch seamlessly without resetting to zero point
- ●High-precision output control and stable power supply
- ●Multiple protection functions: including overload protection, over-temperature protection, short-circuit protection and other safety protection functions
- ●Multiple parallel function: multiple devices can be connected via network cables and controlled separately by the host computer

Parameter Table

project	Technical indicators
Product Model	FD-PRS-ACDC500S20W
Product Name	Programmable bipolar constant current source
Input voltage	AC220V ± 10%
Input voltage frequency	47~63 , unit Hz
Output voltage	0~ ± 20V
Output Pow er	500W
Output Current	0~ ± 25A
efficiency	≥ 80%
Output current stability	＜ 100ppm
Output current resolution	< 1 mA
Communication interface	RJ45-MODBUS-RTU , 2- w ay
Display	4.3 inches
load	Inductive load, inductance 0.5mH ~ 5.8mH
Operating temperature	-20~70℃
Storage temperature	-40~85℃
size	<1 0 0*2 0 0*3 0 0 , unit : mm
w eight	6.1kg